Machines from Serial No T2-168

Guards (machines with goal post axle)

Assy No 59028GP

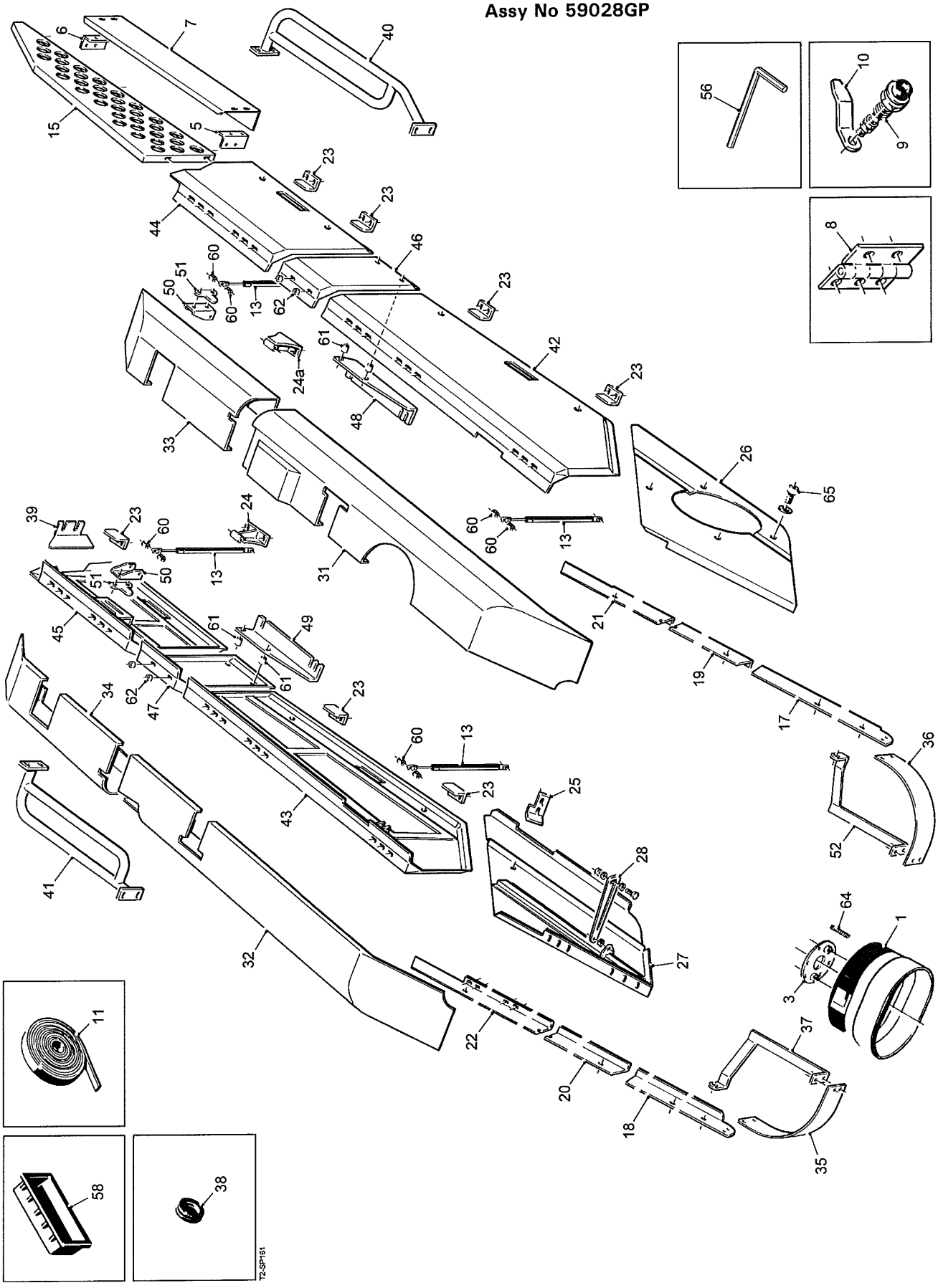

Machines from Serial No T2-168

Guards (machines with goal post axle)

Assy No 59028GP

Item	Part No.	Description	Qty.	Remarks
1	44216	Guard Cone	1	
2				
3	46637	Guard Cone Mounting Ring	1	
4				
5	59591	Front Mounting Angle	1	
6	59592	Rear Mounting Angle	1	
7	59593	Cross Web Guard (1125mm elevator)	1	
	59593A	Cross Web Guard (1300mm elevator)	1	
	59593B	Cross Web Guard (1500mm elevator)	1	
8	57195	Hinge	12	
9	57199	Lock Assembly	8	
10	57219	Guard Latch Arm	8	
11	57221	Foam Tape	1	
12				
13	58111	Gas Strut	4	
14				
15	59279	Cross Web Panel (1125mm elevator)	1	
	59864	Cross Web Panel (1300mm elevator)	1	
	59968	Cross Web Panel (1500mm elevator)	1	
16				
17	59299A	LH Front Pipe Cover	1	
18	59300A	RH Front Pipe Cover	1	
19	59301	LH Centre Pipe Cover	1	
20	59302	RH Centre Pipe Cover	1	
21	59303	LH Rear Pipe Cover	1	
22	59304	RH Rear Pipe Cover	1	
23	59306	Guard Latch Plate	7	
24	59321	Rear Gas Strut Anchor	1	
24a	59321	Rear Gas Strut Anchor	1	Chain drive Omega
	59321A	Rear Gas Strut Anchor	1	Direct drive Omega
25	59327	Guard Latch Plate	1	
26	59440	Oil Cooler Guard	1	
27	59712	RH Cover Panel	1	
28	59713	Stay	1	
29				
30				
31	62390	LH Top Front Guard	1	
32	62391	RH Top Front Guard	1	
33	62392	LH Top Rear Guard	1	
34	62393	RH Top Rear Guard	1	
35	62627	RH Pipe Shield	1	
36	62627A	LH Pipe Shield	1	
37	62628	Pipe Shield Brace	1	
38	62791	Ø20 Grommet	1	For RH rear guard door
39	62846	Guard Infill	1	
40	62920	LH Safety Rail	1	
41	62921	RH Safety Rail	1	
42	62959	LH Middle Guard Door	1	
43	62960	RH Middle Guard Door	1	
44	62961	LH Rear Guard Door	1	
45	62962	RH Rear Guard Door	1	
46	62964	LH Infill Panel	1	

Machines from Serial No T2-168

Guards (machines with goal post axle)

Assy No 59028GP

Item	Part No.	Description	Qty.	Remarks
47	62965	RH Infill Panel	1	
48	62968	LH Infill Mounting Bracket	1	Chain drive Omega
	62968A	LH Infill Mounting Bracket	1	Direct drive Omega
48	62969	RH Infill Mounting Bracket	1	
50	62805	Gas Strut Mounting	2	
51	62806	Gas Strut Mounting Backplate	2	
52	62628A	Pipe Shield Brace	1	
53				
54				
55				
56	-	M8 Guard Key	1	
57				
58	RPC658.300685	Door Pocket Pull	4	
59				
60	SS012010/016	Steel Spacer	8	
61	SS016009/022	Steel Spacer	a/r	
62	SS016009/010	Steel Spacer	4	
63				
64	22106012/065	M12x65 Stud	2	
65	22015010/025	M10x25 Socket Head Cap Screw	4	

Machines from Serial No T2-195

Disc Coulter Assemblies

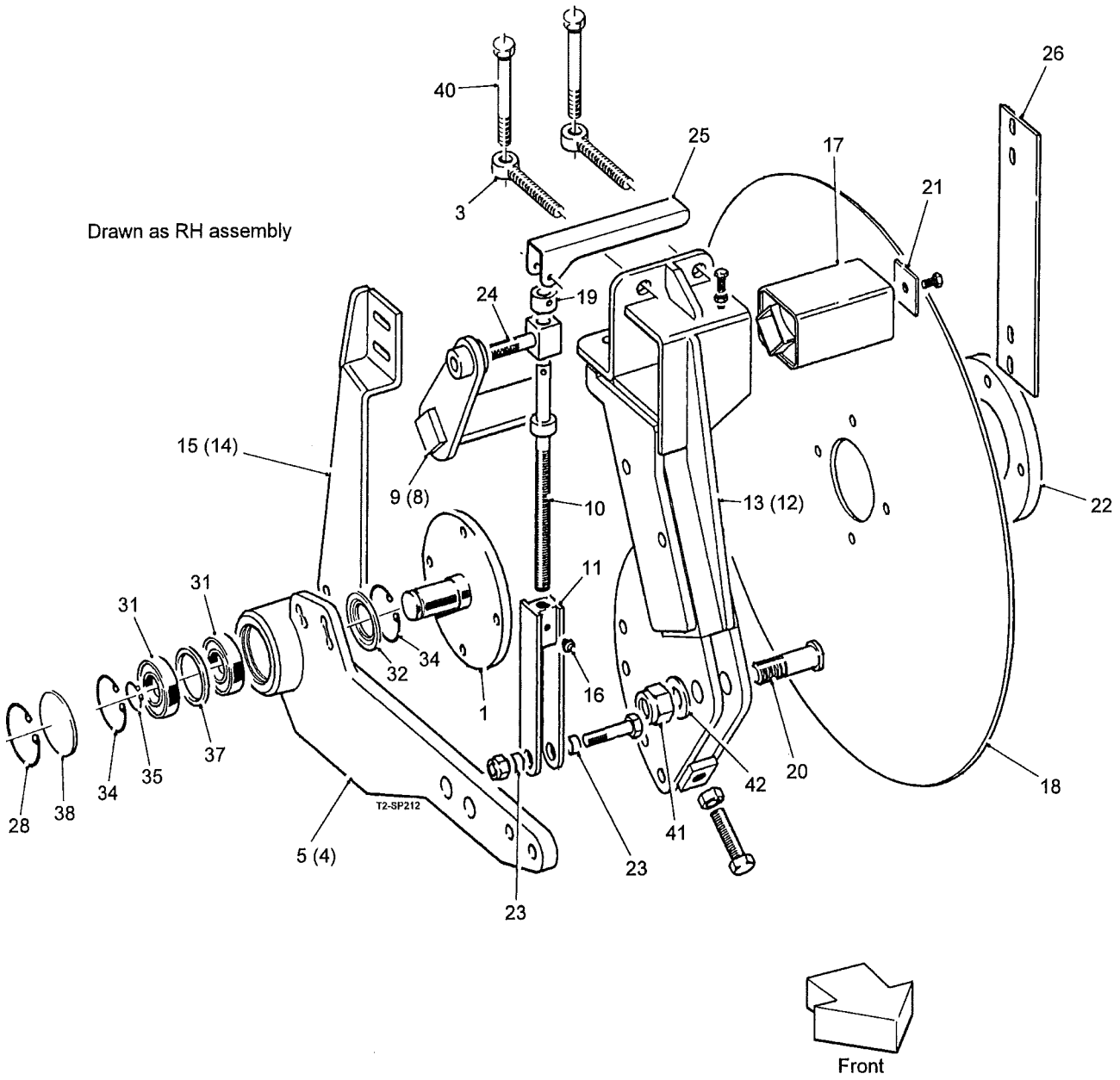

Machines from Serial No T2-195

Disc Coulter Assemblies

Item	Part No.	Description	Qty.	Remarks
1	56293	Disc Spindle	1	
2				
3	RPF120.116095	Eyebolt	2	
4	64187	LH Disc Arm (not shown)	1	
5	64188	RH Disc Arm	1	
6				
7				
8	RPA610.301509	LH Disc Torsion Arm (not shown)	1	
9	RPA610.302189	RH Disc Torsion Arm	1	
10	RPA610.301512	Disc Adjuster Spindle	1	
11	RPA610.301513	Block Adjuster	1	
12	RPA610.301530	LH Disc Mounting Arm (not shown)	1	
13	RPA610.301531	RH Disc Mounting Arm	1	
14	RPA610.301534	Scraper Mounting LH (not shown)	1	
15	RPA610.301535	Scraper Mounting RH	1	
16	RPC648.081250	M8 Straight Grease Nipple	2	
17	RPGMRP084.00001	Rubber Torsion Unit	1	
18	RPM120.300251	Plain Disc (Ø740mm)	1	Option
	RPGM089.00018	Plain Disc (Ø645mm)	1	Option
	RPGMRP089.01829	Serrated Disc	1	Option
19	RPM114.301502	Collar	1	
20	RPM146.303752	Pivot Pin	1	
21	RPM152.303434	Retainer	1	
22	RPM152.308652	Retainer	1	
23	RPM172.301506	Sleeve	2	
24	RPM178.301500	Spigot	1	
25	RPM226.301510	Handle	1	
26	RPW240.303093	Disc Scraper	1	
27				
28	46564	Ø90 Internal Circlip	1	
29				
30				
31	72092RS	Bearing	2	
32	6209ZJV	Nilos Ring	1	
33				
34	W0554	Ø85 Internal Circlip	2	
35	W0117	Ø45 External Circlip	1	
36				
37	64189	Bearing Spacer	1	
38	64190	Dust Cap	1	
39				
40	22012016/150	M16x150 Bolt	2	
41	22041024	M24 Nyloc Nut	1	
42	22046024C	M24 Flat Washer	1	

Machines from Serial No T2-168

Digger Web Assembly

Assy No 59012

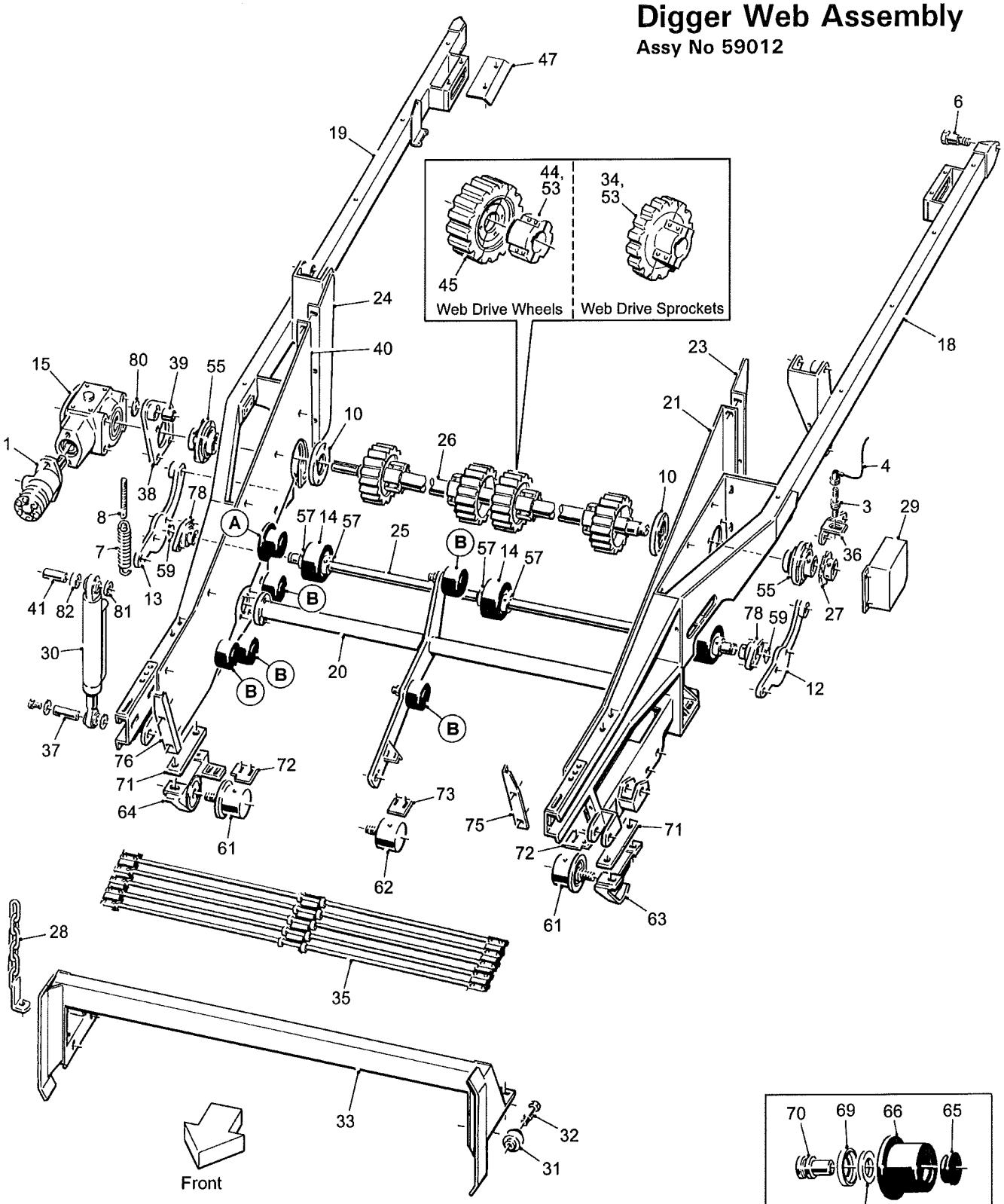

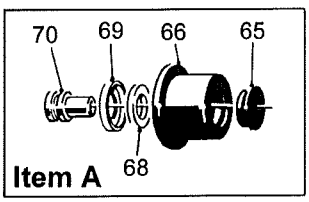

T2-SP125

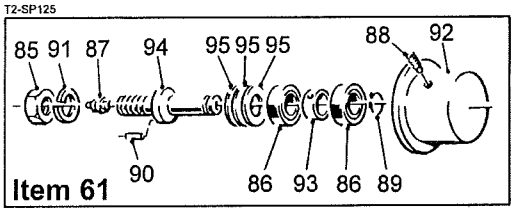

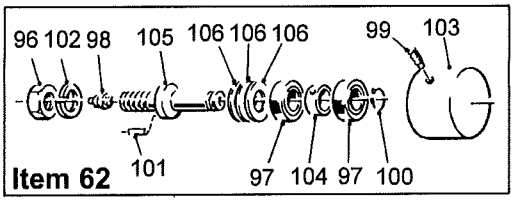

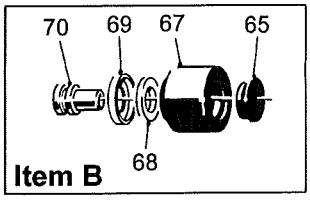

Machines from Serial No T2-168

Digger Web Assembly

Assy No 59012

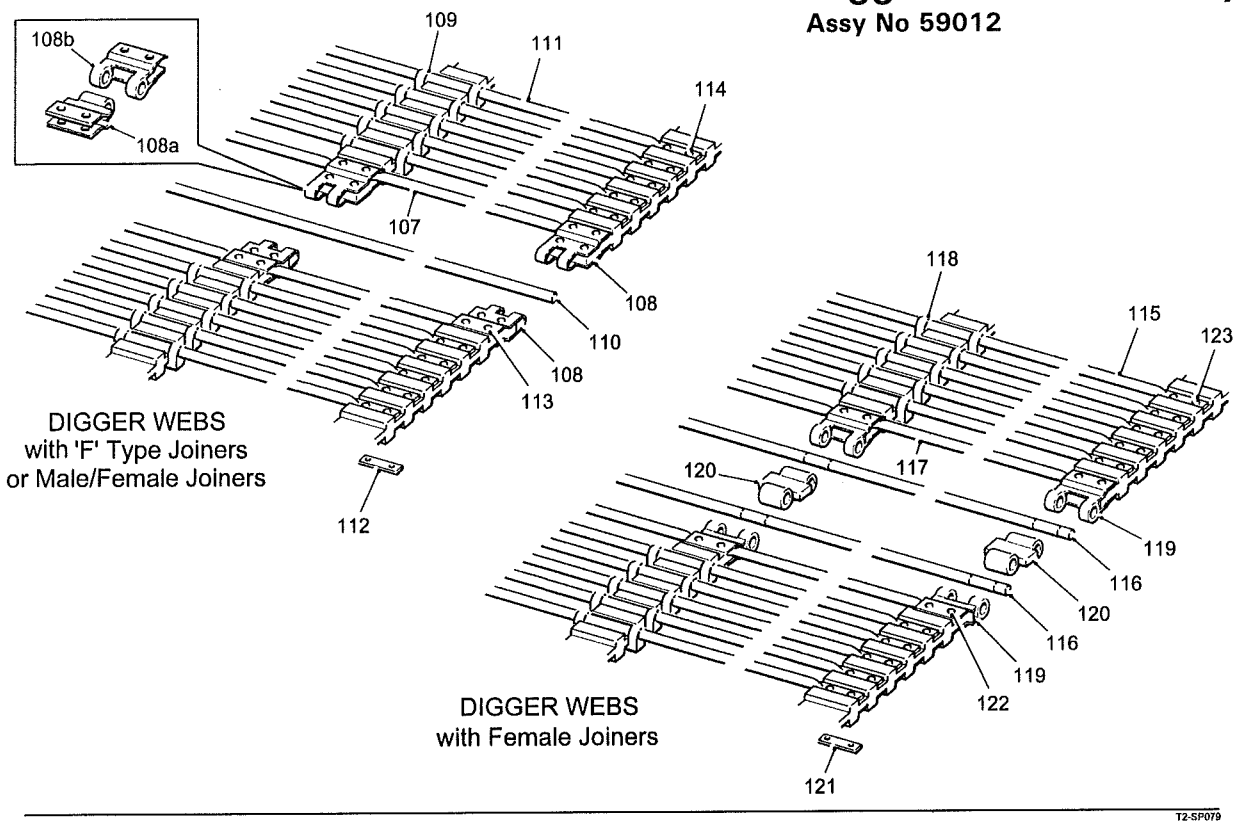

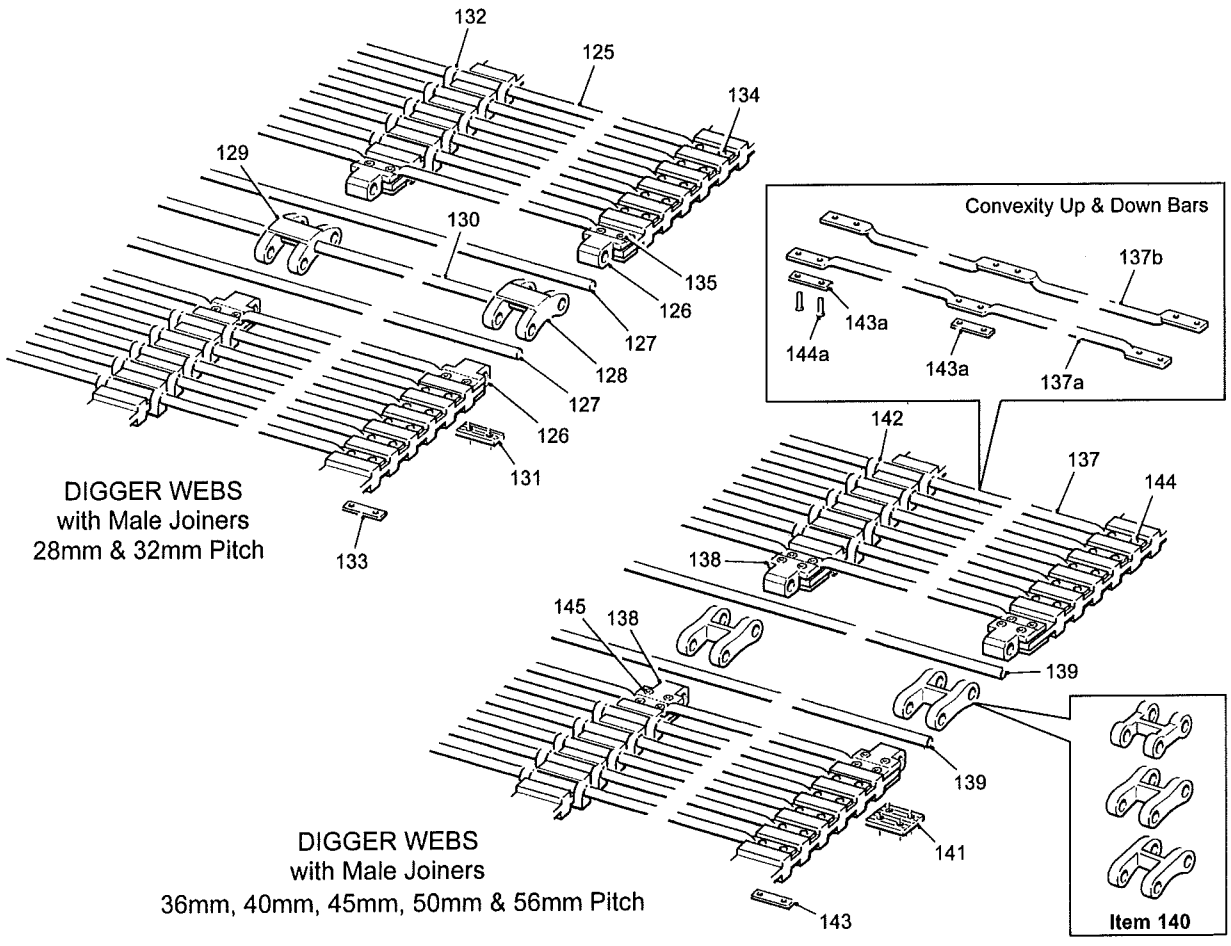

Machines from Serial No T2-168

Digger Web Assembly

Assy No 59012

Item	Part No.	Description	Qty.	Remarks
1	11201	Hydraulic Motor (80cc)	1	
	37897	Hydraulic Motor (100cc)	1	
2				
3	32037/1	Proximity Sensor	1	
4	32037/4	Sensor Cable (10m)	1	
5				
6	42043	Digger Pivot Pin	2	
7	42679	Tension Spring	2	
8	42800	Spring tensioner	2	
9				
10	46401	Bearing Plate	2	
11				
12	56109	Tension Roller Arm LH	1	
13	56110	Tension Roller Arm RH	1	
14	56226	Tension Roller	3	
15	56640	Gearbox Assembly	1	
16				
17				
18	59128	LH Digger Frame	1	
19	59129	RH Digger Frame	1	
20	59130	Roller Support Frame	1	
21	59131	Stainless Steel Side Panel LH	1	
22				
23	59133	Stainless Steel Deflector Panel LH	1	
24	59134	Stainless Steel Deflector Panel RH	1	
25	59135	Tensioner Roller Shaft	1	
26	59234A	Digger Web Drive Shaft	1	
27	59277	Sensor Disc	1	
28	59307	Transport Chain	2	
29	59312	Sensor Guard	1	
30	59341A	Hydraulic Ram (with Ø35 piston rod)	2	With Ø25 rod was 59341
31	59342	Guide Roller	2	
32	59343	Shoulder Bolt	2	
33	59345	Bridge	1	
34	59452	28mm Pitch Web Drive Sprocket	4	
	59753	32mm Pitch Web Drive Sprocket	4	
	56397	36mm Pitch Web Drive Sprocket	4	
35	59453	28mm Pitch Web	1	(see list at end)
	59740	32mm Pitch Web	1	(see list at end)
	59202	36mm Pitch Web	1	(see list at end)
	62601	40mm Pitch Web	1	(see list at end)
	59999	45mm Pitch Web	1	(see list at end)
	62542	50mm Pitch Web	1	(see list at end)
	59998	50mm Pitch Web (with up & down bars)	1	(see list at end)
	62395	56mm Pitch Web (with up & down bars)	1	(see list at end)
36	59477	Sensor Bracket	1	
37	59492	Ø25 Ram Pin	2	
38	59678A	Motor Reaction Bracket	1	
39	59680	Bush	1	
40	59695	Stainless Steel Side Panel RH	1	
41	59748	Ø25 Ram Pin	2	
42				
43				

Machines from Serial No T2-168

Digger Web Assembly

Assy No 59012

Item	Part No.	Description	Qty.	Remarks
44	62036	Drive Wheel Hub	4	
45	62037/28/22	28mm Pitch Web Drive Wheel	4	
	62037/32/18	32mm Pitch Web Drive Wheel	4	
	62037/36/16	36mm Pitch Web Drive Wheel	4	
	62037/40/16	40mm Pitch Web Drive Wheel	4	
	62037/45/13	45mm Pitch Web Drive Wheel	4	
	62037/50/12	50mm Pitch Web Drive Wheel	4	
46				
47	62900	Dirt Shield	2	
48				
49				
50				
51				
52				
53	22062018/115	18x11x115 RBE Key	4	
54				
55	MFC50HLT	Bearing Complete	2	
56				
57	PS326M	Locking Collar	6	
58				
59	RH56	Ø30 External Circlip	2	
60				
61	RPA510.308681	Flanged Steel Roller Assembly	2	(see list at end)
62	RPA510.308684	Plain Steel Roller Assembly	1	(see list at end)
63	RPA610.308694	LH Roller Mounting	1	
64	RPA610.308695	RH Roller Mounting	1	
65	RPC620.303070	Cap	10	
66	RPC700.300146	Flanged Roller c/w Bearings	2	
67	RPC700.300147	Plain Roller c/w Bearings	8	
68	RPGM070.00446	Felt Seal Ring	10	
69	RPGM089.00565	Roller Shield	10	
70	RPM180.303071	Pivot Bush	10	
71	RPM225.308696	Spacer Plate	2	
72	RPW240.300135	Roller Scraper	2	
73	RPW240.300445	Roller Scraper	1	
74				
75	RPS695	LH Clamp Plate	1	
76	RPS696	RH Clamp Plate	1	
77				
78	SFT30	Bearing	2	
79				
80	SS050017/006	Steel Spacer	1	
81	SS035026/010	Steel Spacer	2	
82	SS035026/020	Steel Spacer	2	
83				
84				
	RPA510.308681	**Flanged Roller Assembly Consists Of:**		
85	22029024	M24 Full Nut	1	
86	6205	Bearing	2	
87	RC648.081250	M8 Grease Nipple	1	
88	RPF136.308016	M8x16 Dog Screw	1	
89	RPF200.025200	Ø25 External Circlip	1	
90	RPF222.060016	Ø6x16 Groove Pin	1	
91	RPF290.124000	M24 Shakeproof Washer	1	
92	RPGM001.00180	Flanged Steel Roller	1	

Machines from Serial No T2-168

Digger Web Assembly

Assy No 59012

Item	Part No.	Description	Qty.	Remarks
93	RPM176.307416	Spacer	1	
94	RPM180.307415	Spindle	1	
95	RPS210.002052	Metal Seal	3	
	RPA510.308684	**Plain Roller Assembly Consists Of:**		
96	22029024	M24 Full Nut	1	
97	6205	Bearing	2	
98	RPC648.081250	M8 Grease Nipple	1	
99	RPF136.308016	M8x16 Dog Screw	1	
100	RPF200.025200	Ø25 External Circlip	1	
101	RPF222.060016	Ø6x16 Groove Pin	1	
102	RPF290.124000	M24 Shakeproof Washer	1	
103	RPGM001.00059	Plain Steel Roller	1	
104	RPM176.307416	Spacer	1	
105	RPM180.307415	Spindle	1	
106	RPS210.002052	Metal Seal	3	
	59453	**28mm Pitch Digger Web with 'F' Type Joiners Consists Of:**		
107	59459/1	Ø10 Web Rod (over joiner)	2	Ø12 web rod RPM432.101001
108	59459/2	28mm Pitch 'F' Type Joiner (5 hole)	6	
109	RPGM002.00405	Ø10 Centre Clip	104	
110	RPW300.301210/1	Ø10 Joiner Rod	1	
111	RPM432.309182	Ø10 Web Rod	104	
112	KA16048	Clamp Plate (2 hole)	208	
113	DIN661 5x30	Ø5x30 Rivet	30	
114	DIN661 5x23	Ø5x23 Rivet	416	
	59202	**36mm Pitch Digger Web with 'F' Type Joiners or Male/Female Joiners Consists Of:**		
107	59459/1	Ø10 Web Rod (under joiner)	2	
108	RPM419.663632	36mm Pitch 'F' Type Joiner (4 hole)	6	
108a	56155/1	36mm Pitch Male Joiner (2 hole)	3	
108b	56155/2	36mm Pitch Female Joiner (2 hole)	3	
109	RPGM002.00405	Ø10 Centre Clip	80	
110	RPW300.301210/1	Ø10 Joiner Rod	1	
111	RPM432.309182	Ø10 Web Rod	80	
112	KA16048	Clamp Plate (2 hole)	160	
113	DIN661 5x30	Ø5x30 Rivet	24	
114	DIN661 5x23	Ø5x23	320	
	59202	**36mm Pitch Digger Web with Female Joiners Consists Of:**		
115	RPM432.309182	Ø10 Web Rod	79	
116	RPM432.309183	Ø10 Joiner Rod	2	
117	RPM432.101001	Ø12 Web Rod (under joiner)	2	
118	RPGM002.00405	Ø10 Centre Clip	79	
119	56155/2	Female Joiner Clip (2 hole)	6	
120	57642/36/4	36mm Pitch Double Pivot	3	
121	56155/5	Clamp Plate (2 hole)	158	
122	RPF240.160300	Ø6x30 Rivet	12	
123	59202/2	Ø5/Ø6x23 2-Stage Rivet	316	
124				

Machines from Serial No T2-168

Digger Web Assembly

Assy No 59012

Item	Part No.	Description	Qty.	Remarks
	59453	**28mm Pitch Digger Web with Male Joiners Consists Of:**		
125	59453/1	Ø11 Web Rod	102	
126	59453/2	28mm Pitch Male Joiners & Web Rod	2	c/w clamp plates & screws
127	59453/3	Joiner Rod (Ø11x1630)	2	
128	59453/4	28mm Pitch Outer Joining Lock	2	
129	59453/5	28mm Pitch Inner Joining Lock	1	
130	59453/6	Centre Joiner Rod (Ø11x1600)	1	
131	57456/28/3	Tapped Clamp Plate (2 hole)	6	
132	RPGM002.00406	Ø11 Centre Clip	102	
133	12238/6	Clamp Plate (2 hole)	204	
134	57058/4	Ø5.5x23 Rivet	408	
135	22016006/025	M6x25 CSK Setscrew	12	
136				
	59740	**32mm Pitch Digger Web with Male Joiners Consists Of:**		
125	59453/1	Ø11 Web Rod	89	
126	-	32mm Pitch Male Joiners & Web Rod	2	c/w clamp plates & screws
127	59453/3	Joiner Rod (Ø11x1630)	2	
128	57456/32/2	32mm Pitch Outer Joining Lock	2	
129	57456/32/2A	32mm Pitch Inner Joining Lock	1	
130	59453/6	Centre Joiner Rod (Ø11x1600)	1	
131	57456/28/3	Tapped Clamp Plate (2 hole)	6	
132	RPGM002.00406	Ø11 Centre Clip	89	
133	12238/6	Clamp Plate (2 hole)	178	
134	57058/4	Ø5.5x23 Rivet	356	
135	22016006/025	M6x25 CSK Setscrew	12	
136				
	59202	**36mm Pitch Digger Web with Male Joiners Consists Of:**		
137	59453/1	Ø11 Web Rod	79	
138	59202/3G	36mm Pitch Male Joiners & Web Rod	2	c/w clamp plates & screws
139	59453/3	Joiner Rod (Ø11x1630)	2	
140	57058/36/3HD	36mm Pitch 'H' Joining Lock	3	
141	57456/36/3	Tapped Clamp Plate (4 hole)	6	
142	RPGM002.00406	Ø11 Centre Clip	79	
143	12238/6	Clamp Plate (2 hole)	158	
144	57058/4	Ø5.5x23 Rivet	316	
145	22016006/025	M6x25 CSK Setscrew	24	
146				
	62601	**40mm Pitch Digger Web with Male Joiners Consists Of:**		
137	59453/1	Ø11 Web Rod	71	
138	59236/1	40mm Pitch Male Joiners & Web Rod	2	c/w clamp plates & screws
139	59453/3	Joiner Rod (Ø11x1630)	2	
140	59236/2	40mm Pitch 'H' Joining Lock	3	
141	59236/3	Tapped Clamp Plate (4 hole)	6	
142	RPGM002.00406	Ø11 Centre Clip	71	
143	12238/6	Clamp Plate (2 hole)	142	
144	57058/4	Ø5.5x23 Rivet	284	
145	22016006/025	M6x25 CSK Setscrew	24	
146				

Machines from Serial No T2-168

Digger Web Assembly

Assy No 59012

Item	Part No.	Description	Qty.	Remarks
	59999	**45mm Pitch Digger Web with Male Joiners Consists Of:**		
137	59453/1	Ø11 Web Rod	63	
138	59237/3	45mm Pitch Male Joiners & Web Rod	2	c/w clamp plates & screws
139	59453/3	Joiner Rod (Ø11x1630)	2	
140	57058/45/3HD	45mm Pitch 'H' Joining Lock	3	
141	57058/45/4HD	Tapped Clamp Plate (4 hole)	6	
142	RPGM002.00406	Ø11 Centre Clip	63	
143	12238/6	Clamp Plate (2 hole)	126	
144	57058/4	Ø5.5x23 Rivet	252	
145	22016006/025	M6x25 CSK Setscrew	24	
146				
	62542 & 59998	**50mm Pitch Digger Web with Male Joiners Consists Of:**		
137	59453/1	Ø11 Web Rod	56	Assy 62542 only
137a	59998/1	Web Rod (convexity up)	28	Assy 59998 only
137b	59998/2	Web Rod (convexity down)	28	Assy 59998 only
138	59238/1	50mm Pitch Male Joiners & Web Rod	2	c/w clamp plates & screws
139	59453/3	Joiner Rod (Ø11x1630)	2	
140	59238/2	50mm Pitch 'H' Joining Lock	3	
141	59238/3	Tapped Clamp Plate (4 hole)	6	
142	RPGM002.00406	Ø11 Centre Clip	56	Assy 62542 only
143	12238/6	Clamp Plate (2 hole)	112	Assy 62542 only
143a	56155/5	Clamp Plate (2 hole)	168	Assy 59998 only
144	57058/4	Ø5.5x23 Rivet	224	Assy 62542 only
144a	RPF240.160250	Ø6x25 Rivet	336	Assy 59998 only
145	22016006/025	M6x25 CSK Setscrew	24	
146				
	62395	**56mm Pitch Digger Web with Male Joiners Consists Of:**		
137a	59998/1	Web Rod (convexity up)	25	
137b	59998/2	Web Rod (convexity down)	25	
138	62395/1	56mm Pitch Male Joiners & Web Rod	2	c/w clamp plates & screws
139	59453/3	Joiner Rod (Ø11x1630)	2	
140	57058/56/3HD	56mm Pitch 'H' Joining Lock	3	
141	57058/56/3	Tapped Clamp Plate (6 hole)	6	
142				
143a	56155/5	Clamp Plate (2 hole)	150	
144a	RPF240.160250	Ø6x25 Rivet	300	
145	22016006/025	M6x25 CSK Setscrew	36	
146				

Machines from Serial No T2-168

Haulm Roller Assembly

Assy No 59018A

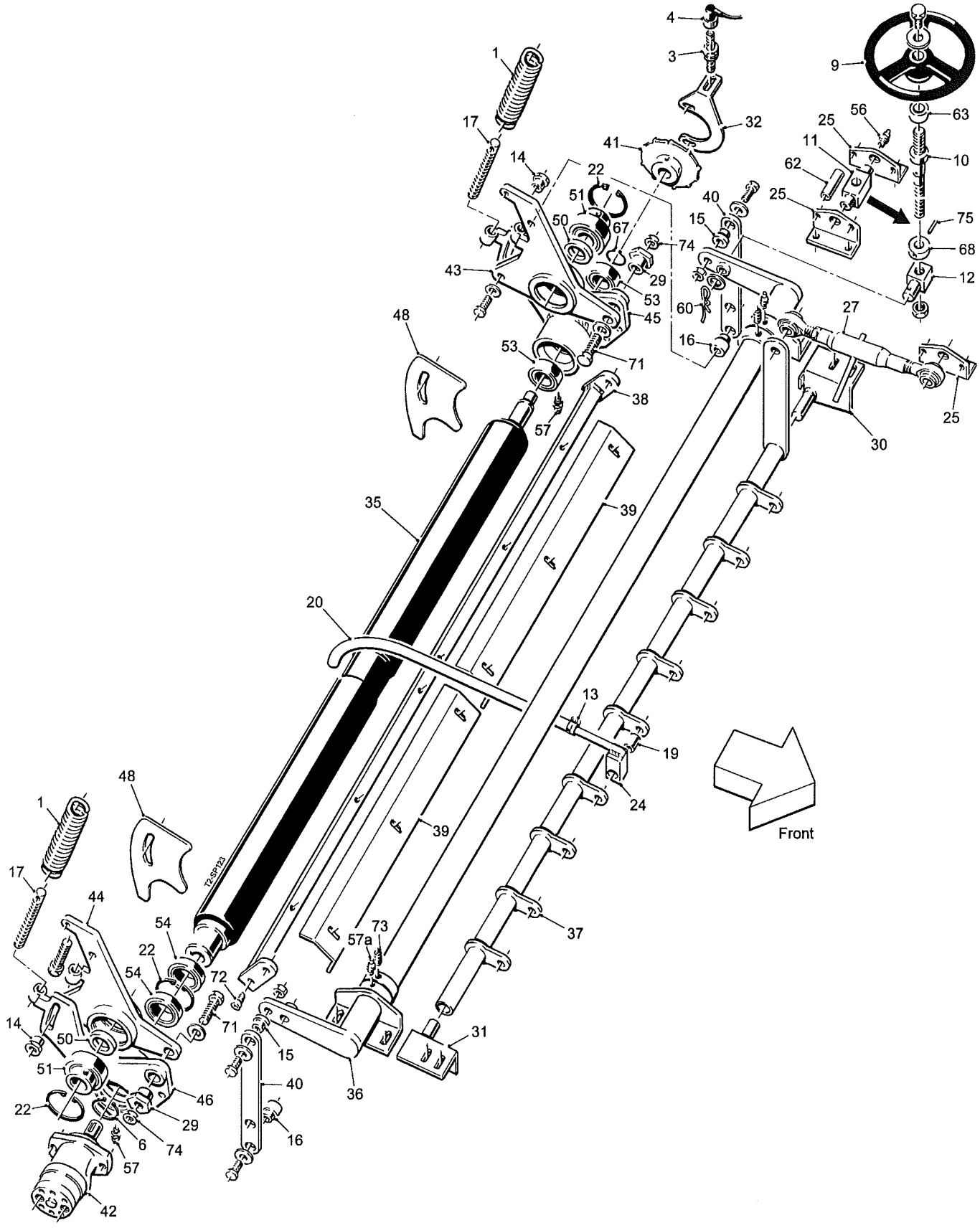

Machines from Serial No T2-168

Haulm Roller Assembly

Assy No 59018A

Item	Part No.	Description	Qty.	Remarks
1	11648	Tension Spring	2	
2				
3	32037/1	Proximity Sensor	1	
4	32037/2	Sensor Cable (5m)	1	
5				
6	33130/16	Ø50 External Circlip	1	
7				
8				
9	42109	Hand Wheel	1	
10	42127	Screw Adjuster	1	
11	42137	Adjuster Screw Trunnion	1	
12	42141	Trunnion	1	
13	42648	14mm-22m Jubilee Clip	9	
14	42778	Guide Bush	2	
15	42781	Pivot Bush (short)	2	
16	42781A	Pivot Bush (long)	2	
17	42800	Spring Tensioner	2	
18				
19	44122	Pivot Boss	9	
20	44159	Plastic Cover	9	
21				
22	46564	Ø90 Internal Circlip	3	
23				
24	51052	Haulm Finger	9	
25	51514	Adjuster Angle	3	
26				
27	54327	Top Link Assembly	1	
28				
29	56209	Pivot Boss	2	
30	56221	LH Mounting Bracket	1	
31	56222	RH Mounting Bracket	1	
32	56921	Sensor Bracket	1	
33				
34				
35	59114A	Haulm Roller	1	
36	59116	Adjuster Shaft	1	
37	59117	Haulm Finger Mounting	1	
38	59121A	Scraper Mounting	1	
39	59122	Scraper Blade	2	
40	59123	Adjuster Link	2	
41	59151	Sensor Disc	1	
42	59803	Hydraulic Motor	1	
43	59826A	LH Support Bracket	1	
44	59827A	RH Support Bracket	1	
45	59828A	LH Mounting Plate	1	
46	59829A	RH Mounting Plate	1	
47				
48	62502	Filler Plate	2	
49				
50	64073	Bearing Spacer	2	
51	1150-50	Bearing	2	
52				
53	6207RS	Bearing	2	
54	6210RS	Bearing	2	
55				

Machines from Serial No T2-168

Haulm Roller Assembly

Assy No 59018A

Item	Part No.	Description	Qty.	Remarks
56	GS411	1/8"BSP Angled Grease Nipple	2	
57	GS412	1/8"BSP Straight Grease Nipple	2	Prior to 2016 was Qty x4
57a	RPC648.081250	M8 Straight Grease Nipple	2	Prior to 2016 was GS412
58				
59				
60	S86-82-002	'R' Clip	1	
61				
62	SS016011/053	Steel Spacer	2	
63	SS030025/022	Steel Spacer	1	
64				
65				
66				
67	W0118	Ø35 External Circlip	1	
68	W0679	Stop Collar	1	
69				
70				
71	22011020/070	M20x70 Setscrew	2	
72	22015016/045	M16x45 Socket Head Cap Screw	2	
73	22018008/010	M8x10 Grub Screw	2	Prior to 2016 was 22018010/010
74	22034020	M20 Half Nut	2	
75	22067006/030	Ø6x30 Roll Pin	1	

Machines from 2016

Front 3R OMEGA (220mm centres)

Assy No 59094A

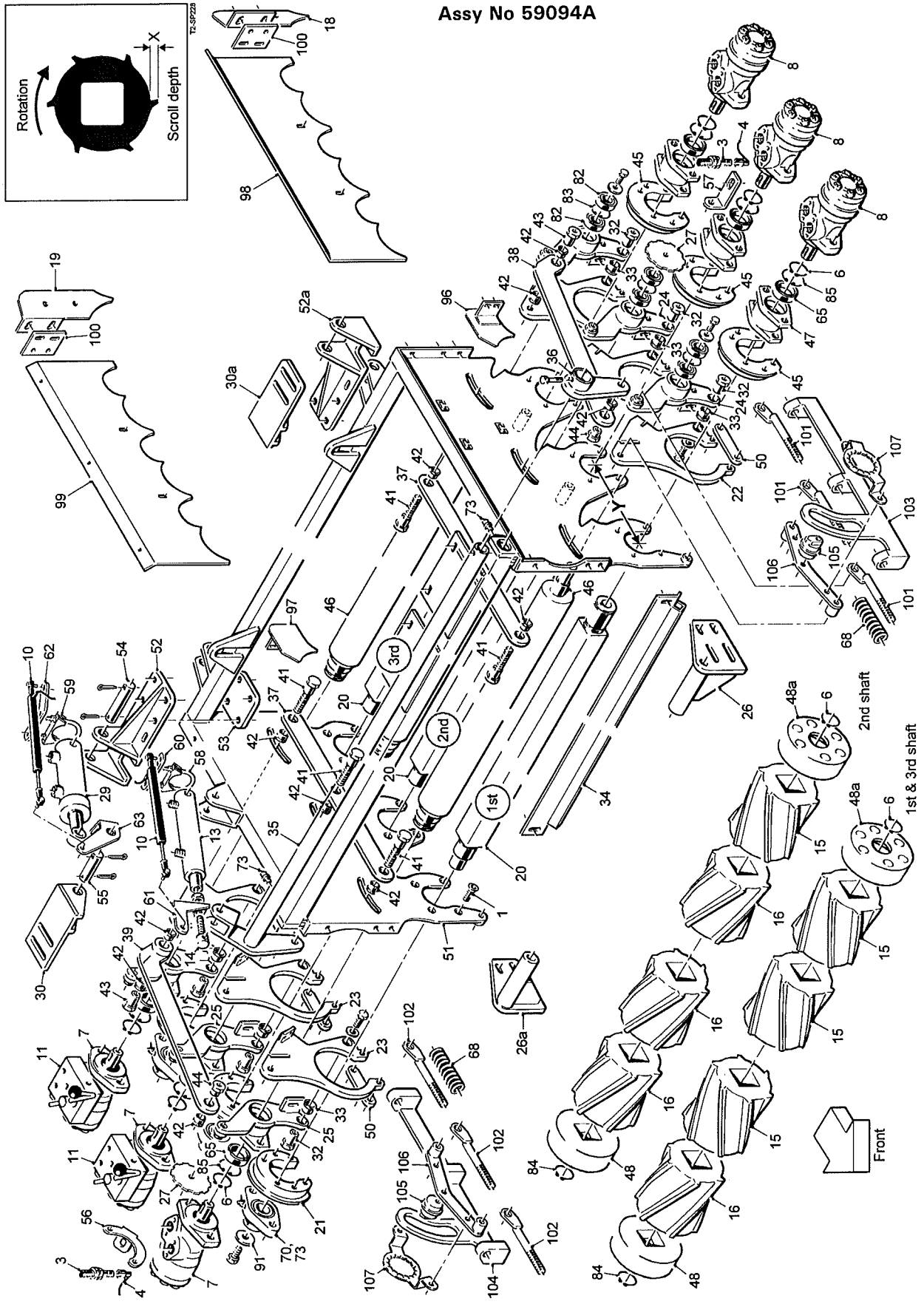

Machines from 2016

Front 3R OMEGA (220mm centres)

Assy No 59094A

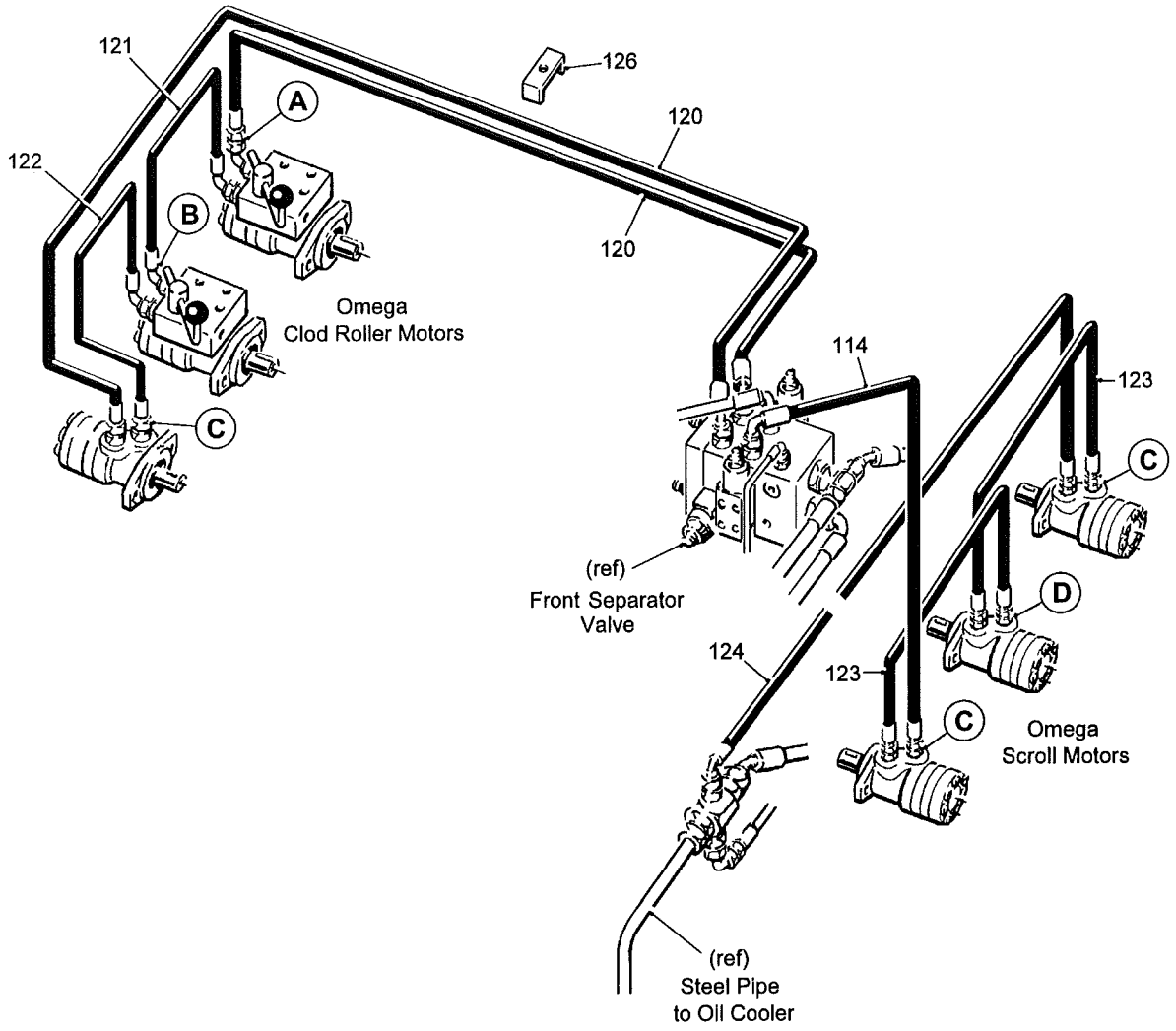

T2-SP229

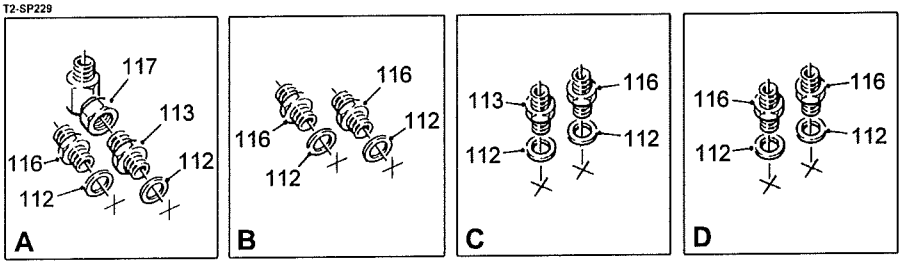

Machines from 2016

Front 3R OMEGA (220mm centres)

Assy No 59094A

Item	Part No.	Description	Qty.	Remarks
1	22016010/020	M10x20 CSK Socket Head Screw	24	
2				
3	32037/1	Proximity Sensor	2	
4	32037/2	Sensor Cable (5m)	2	
5				
6	33130/16	Ø50 External Circlip	9	
7	44563	Hydraulic Motor	3	
8	RPH850.306210	Hydraulic Motor	3	
9				
10	55122	Sensor	2	
11	56112	Diverter Valve	2	
12				
13	56679A	Hydraulic Ram	1	
14	56690	Ram Eye	1	
15	59934C	LH Cavity Scroll (X=10mm)	19	LH Solid Scroll 59934S
	59936C	LH Cavity Scroll (X=6mm)	19	LH Solid Scroll 59936S
16	59935C	RH Cavity Scroll (X=10mm)	11	RH Solid Scroll 59935S
	59937C	RH Cavity Scroll (X=6mm)	11	RH Solid Scroll 59937S
17				
18	59481	LH Deflector	1	
19	59482	RH Deflector	1	
20	59136A/1800	Scroll Shaft	3	
21	59692	Bearing Boss	3	
22	64066	LH Carrier Plate	3	
23	64067	RH Carrier Plate	3	
24	64047	LH Clod Roller Plate	3	
25	64046	RH Clod Roller Plate	3	
26	59697	LH Mounting Bracket	1	
26a	59698	RH Mounting Bracket	1	
27	64012	Sensor Disc	2	
28				
29	59153A	Hydraulic Ram	2	
30	59154	Ram Anchor RH	1	
30a	59154A	Ram Anchor LH	1	
31				
32	59162	Pivot Pin	6	
33	59163	Pivot Flange Bush	6	
34	59164/1800	Clod Roller Scraper	3	
35	59165/1800	Clod Roller Lift Shaft	1	
36	59166	Clod Roller Lift Arm	1	
37	59693	Connecting Link (3 roller)	2	
38	59171	LH Link	1	
39	59172	RH Link	1	
40				
41	59174	Shoulder Bolt (long)	6	
42	59175	Pivot Flange Bush	12	
43	59176	Tapped Boss (long)	2	
44	59177	Tapped Boss (short)	2	
45	59928	Bearing Boss	3	
46	59927/1800	Ø63 Ebonite Clod Roller	3	Option
	62753/1800	Ø60 Stainless Steel Clod Roller	3	Option
	62841/1800	Ø60 Mild Steel Clod Roller	3	Option
	62864/1800	Ø63 Rubber Clod Roller	3	Option

Machines from 2016

Front 3R OMEGA (220mm centres)

Assy No 59094A

Item	Part No.	Description	Qty.	Remarks
47	59929	Motor Mount	3	
48	59348	End Cap (Ø45 bore)	3	
48a	59348A	End Cap (Ø50 bore)	3	
49				
50	59352	Carrier Plate Tie	6	
51	59696B	3 Roller Omega Frame (Y = 220mm)	1	
52	59354	Ram Bracket RH	1	
52a	59354A	Ram Bracket LH	1	
53	59355	Ram Bracket Clamp	2	
54	59358	Ram Body Pin	2	
55	59359	Ram Piston Pin	2	
56	62912	Sensor Bracket	1	
57	64013	Sensor Bracket	1	
58	59396	Ø42 Exhaust Clamp	1	
59	59397	Ø60 Exhaust Clamp	1	
60	59398	Ø42 Ram Body Bracket	1	
61	59399	Ø42 Ram Piston Bracket	1	
62	59400	Ø60 Ram Body Bracket	1	
63	59401	Ø60 Ram Piston Bracket	1	
64				
65	60102RS	Bearing	6	
66				
67				
68	DW25131	Compression Spring	6	
69				
70	LFTC35A	Bearing	3	
71				
72				
73	RPC648.061001	Grease Nipple 45°	5	
74				
75				
76				
77				
78				
79				
80				
81				
82	60062RS	Bearing	6	
83	W0111	Ø55 Internal Circlip	3	
84	W0117	Ø45 External Circlip	3	
85	W0161	Ø80 Internal Circlip	6	
86				
87				
88				
89				
90				
91	SS040011/003	Steel Spacer	3	
92				
93				
94				
95				
96	62650	LH Deflector Plate (long)	3	
97	62651	RH Deflector Plate (long)	3	
98	62656	LH Side Panel	1	
99	62657	RH Side Panel	1	

Machines from 2016

Front 3R OMEGA (220mm centres)

Assy No 59094A

Item	Part No.	Description	Qty.	Remarks
100	62888	Spacer Plate	2	
101	62903	LH Adjuster	3	
102	62904	RH Adjuster	3	
103	64097LH	Adjuster Strap LH	1	
104	64097RH	Adjuster Strap RH	1	
105	62908	Adjuster Boss	2	
106	62913A	Adjuster Plate	2	
107	62914	Indicator Plate	2	
108				
109				
110				
111				
		Hydraulic Components Consist Of:		
112	11124	1/2"BSP Dowty Seal	12	
113	11295	1/2"BSP x 3/4"BSP M M Adaptor	4	
114	11744	3/4"Hose Assembly (1400mm)	1	
115				
116	12315	1/2"BSP M M Adaptor	8	
117	41115	3/4"BSP M F Compact 90°Adaptor	1	
118				
119				
120	60268	3/4"Hose Assembly (3200mm)	2	
121	60431	1/2"Hose Assembly (450mm)	1	
122	60490	1/2"Hose Assembly (500mm)	1	
123	60566	1/2"Hose Assembly (500mm)	2	
124	60675	3/4"Hose Assembly (2000mm)	1	
125				
126	62966	Hose Clamp	3	

Machines from 2016

Rear 4R OMEGA (220mm centres)

Assy No 59095A

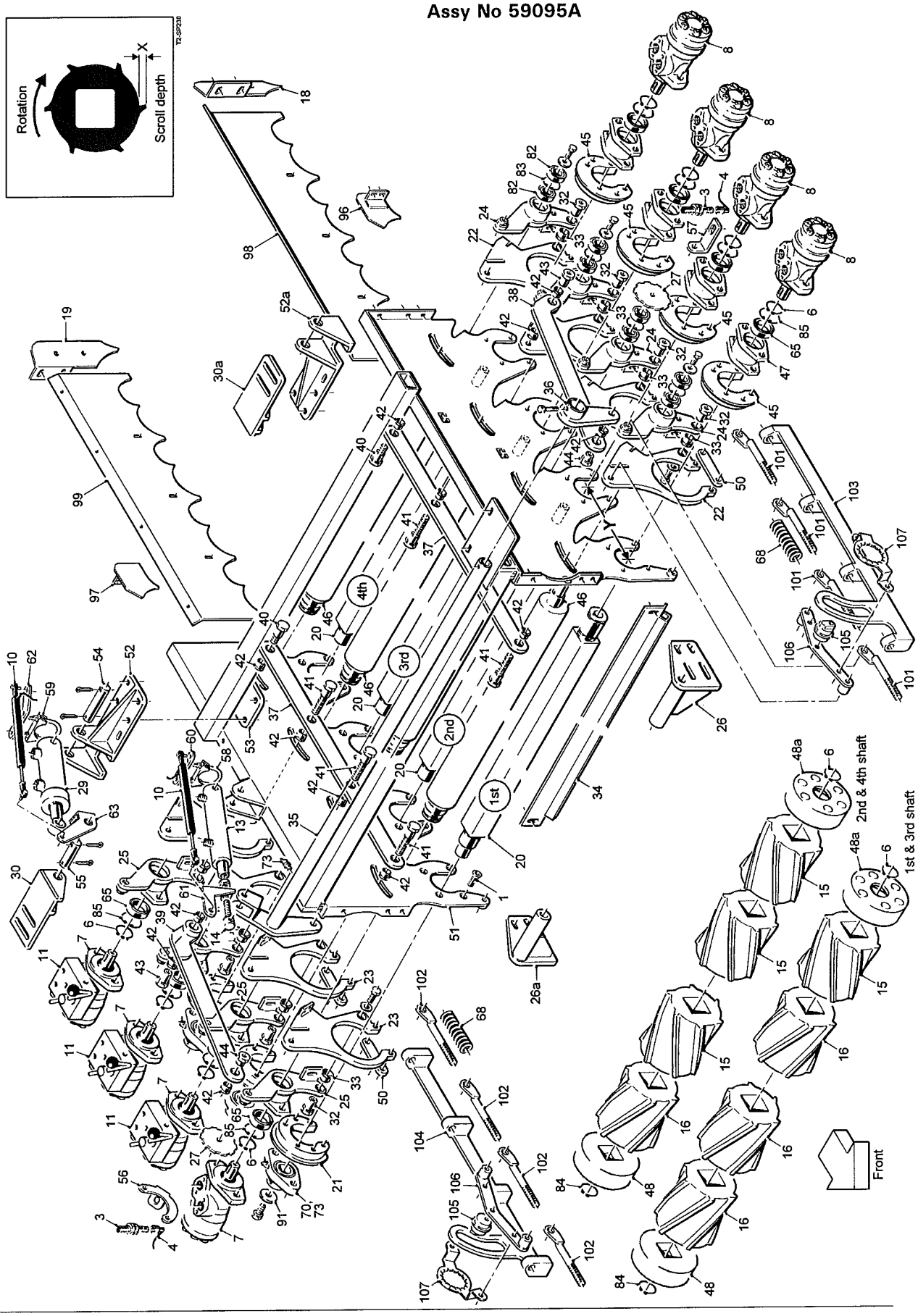

Machines from 2016

Rear 4R OMEGA (220mm centres)

Assy No 59095A

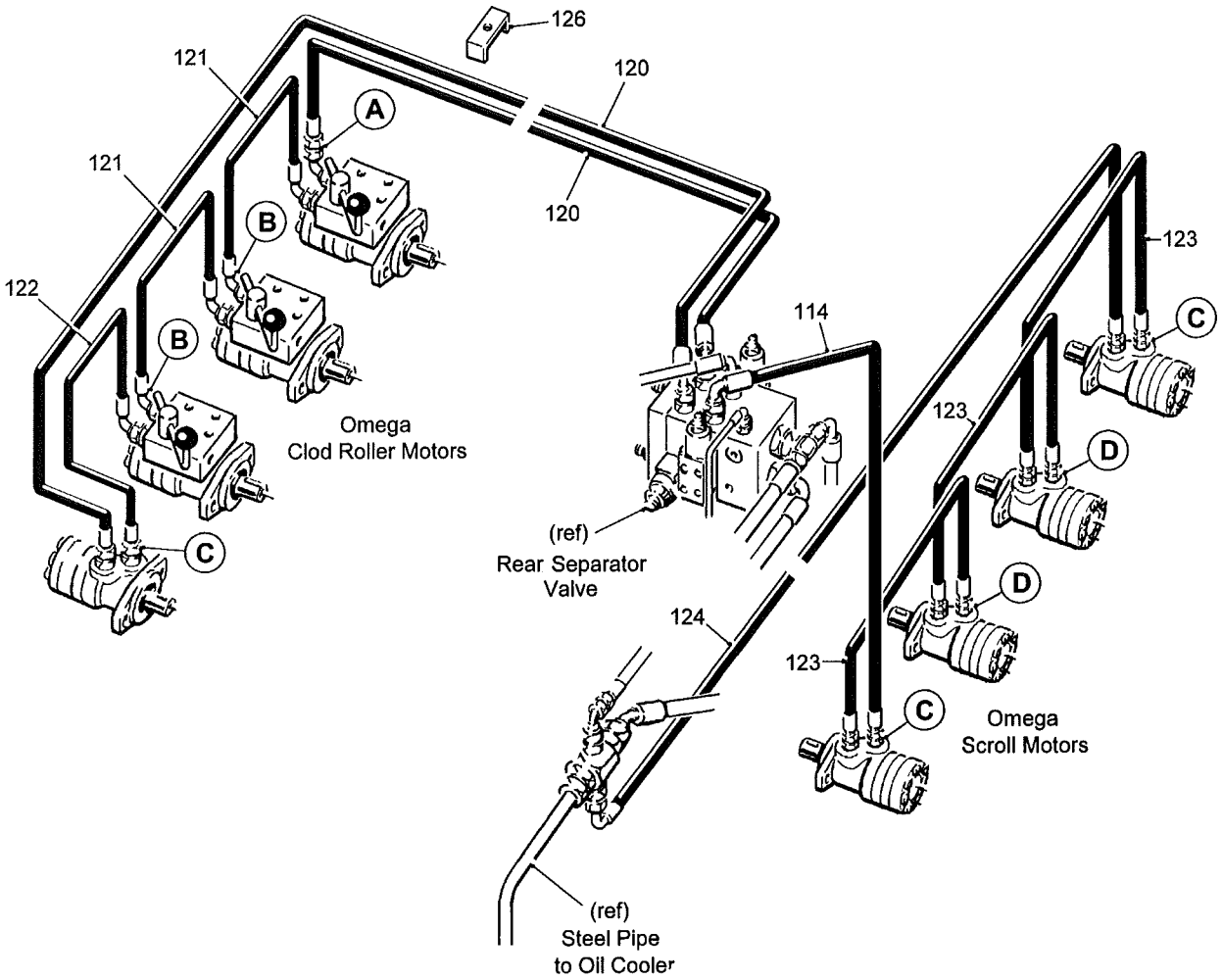

T2-SP231

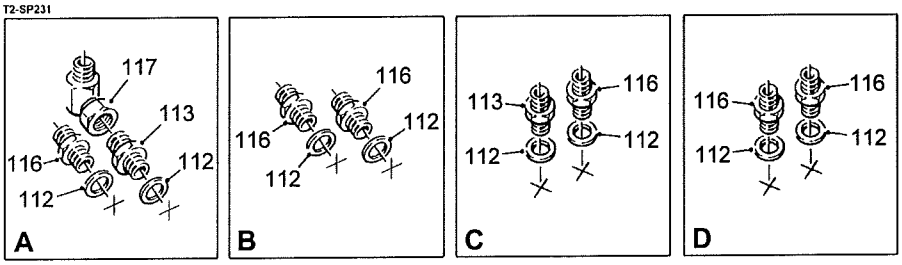

Machines from 2016

Rear 4R OMEGA (220mm centres)

Assy No 59095A

Item	Part No.	Description	Qty.	Remarks
1	22016010/020	M10x20 CSK Socket Head Screw	32	
2				
3	32037/1	Proximity Sensor	2	
4	32037/2	Sensor Cable (5m)	2	
5				
6	33130/16	Ø50 External Circlip	12	
7	44563	Hydraulic Motor	4	
8	RPH850.306210	Hydraulic Motor	4	
9				
10	55122	Sensor	2	
11	56112	Diverter Valve	3	
12				
13	56679A	Hydraulic Ram	1	
14	56690	Ram Eye	1	
15	59934C	LH Cavity Scroll (X=10mm)	20	LH Solid Scroll 59934S
	59936C	LH Cavity Scroll (X=6mm)	20	LH Solid Scroll 59936S
16	59935C	RH Cavity Scroll (X=10mm)	20	RH Solid Scroll 59935S
	59937C	RH Cavity Scroll (X=6mm)	20	RH Solid Scroll 59937S
17				
18	59481	LH Deflector	1	
19	59482	RH Deflector	1	
20	59136A/1800	Scroll Shaft	4	
21	59692	Bearing Boss	4	
22	64066	LH Carrier Plate	4	
23	64067	RH Carrier Plate	4	
24	64047	LH Clod Roller Plate	4	
25	64046	RH Clod Roller Plate	4	
26	59697	LH Mounting Bracket	1	
26a	59698	RH Mounting Bracket	1	
27	64012	Sensor Disc	2	
28				
29	59153A	Hydraulic Ram	2	
30	59154	Ram Anchor RH	1	
30a	59154A	Ram Anchor LH	1	
31				
32	59162	Pivot Pin	8	
33	59163	Pivot Flange Bush	8	
34	59164/1800	Clod Roller Scraper	4	
35	59165/1800	Clod Roller Lift Shaft	1	
36	59166	Clod Roller Lift Arm	1	
37	59694	Connecting Link (4 roller)	2	
38	59171	LH Link	1	
39	59172	RH Link	1	
40	59173	Shoulder Bolt (short)	2	
41	59174	Shoulder Bolt (long)	6	
42	59175	Pivot Flange Bush	14	
43	59176	Tapped Boss (long)	2	
44	59177	Tapped Boss (short)	2	
45	59928	Bearing Boss	4	
46	59927/1800	Ø63 Ebonite Clod Roller	4	Option
	62753/1800	Ø60 Stainless Steel Clod Roller	4	Option
	62841/1800	Ø60 Mild Steel Clod Roller	4	Option
	62864/1800	Ø63 Rubber Clod Roller	4	Option

Machines from 2016

Rear 4R OMEGA (220mm centres)

Assy No 59095A

Item	Part No.	Description	Qty.	Remarks
47	59929	Motor Mount	4	
48	59348	End Cap (Ø45 bore)	4	
48a	59348A	End Cap (Ø50 bore)	4	
49				
50	59352	Carrier Plate Tie	8	
51	59632A	4 Roller Omega Frame (Y = 220mm)	1	
52	59354	Ram Bracket RH	1	
52a	59354A	Ram Bracket LH	1	
53	59355	Ram Bracket Clamp	2	
54	59358	Ram Body Pin	2	
55	59359	Ram Piston Pin	2	
56	62912	Sensor Bracket	1	
57	64013	Sensor Bracket	1	
58	59396	Ø42 Exhaust Clamp	1	
59	59397	Ø60 Exhaust Clamp	1	
60	59398	Ø42 Ram Body Bracket	1	
61	59399	Ø42 Ram Piston Bracket	1	
62	59400	Ø60 Ram Body Bracket	1	
63	59401	Ø60 Ram Piston Bracket	1	
64				
65	60102RS	Bearing	8	
66				
67				
68	DW25131	Compression Spring	8	
69				
70	LFTC35A	Bearing	4	
71				
72				
73	RPC648.061001	Grease Nipple 45°	6	
74				
75				
76				
77				
78				
79				
80				
81				
82	60062RS	Bearing	6	
83	W0111	Ø55 Internal Circlip	3	
84	W0117	Ø45 External Circlip	3	
85	W0161	Ø80 Internal Circlip	6	
86				
87				
88				
89				
90				
91	SS040011/003	Steel Spacer	4	
92				
93				
94				
95				
96	62652	LH Deflector Plate (short)	4	
97	62653	RH Deflector Plate (short)	4	
98	62658	LH Side Panel	1	
99	62659	RH Side Panel	1	

Machines from 2016

Rear 4R OMEGA (220mm centres)

Assy No 59095A

Item	Part No.	Description	Qty.	Remarks
100				
101	62903	LH Adjuster	4	
102	62904	RH Adjuster	4	
103	64197LH	Adjuster Strap LH	1	
104	64197RH	Adjuster Strap RH	1	
105	62908	Adjuster Boss	2	
106	62913A	Adjuster Plate	2	
107	62914	Indicator Plate	2	
108				
109				
110				
111				
		Hydraulic Components Consist Of:		
112	11124	1/2"BSP Dowty Seal	16	
113	11295	1/2"BSP x 3/4"BSP M M Adaptor	4	
114	11744	3/4"Hose Assembly (1400mm)	1	
115				
116	12315	1/2"BSP M M Adaptor	12	
117	41115	3/4"BSP M F Compact 90°Adaptor	1	
118				
119				
120	60268	3/4"Hose Assembly (3200mm)	2	
121	60431	1/2"Hose Assembly (450mm)	2	
122	60490	1/2"Hose Assembly (500mm)	1	
123	60566	1/2"Hose Assembly (500mm)	3	
124	60660	3/4"Hose Assembly (2200mm)	1	
125				
126	62966	Hose Clamp	3	

Machines from 2015

Front 3R OMEGA (220mm centres)

Assy No 62737AF

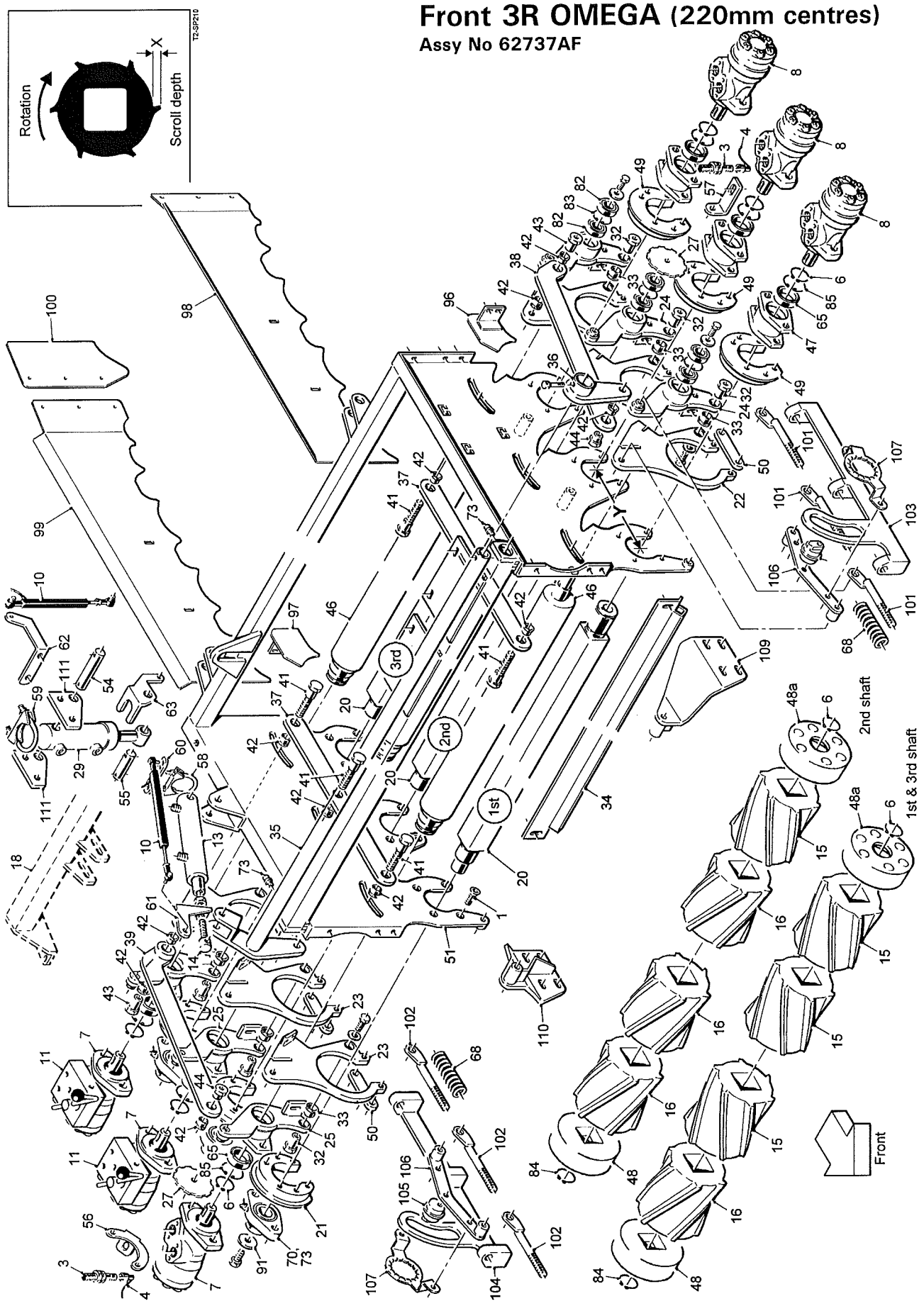

Machines from 2015

Front 3R OMEGA (220mm centres)

Assy No 62737AF

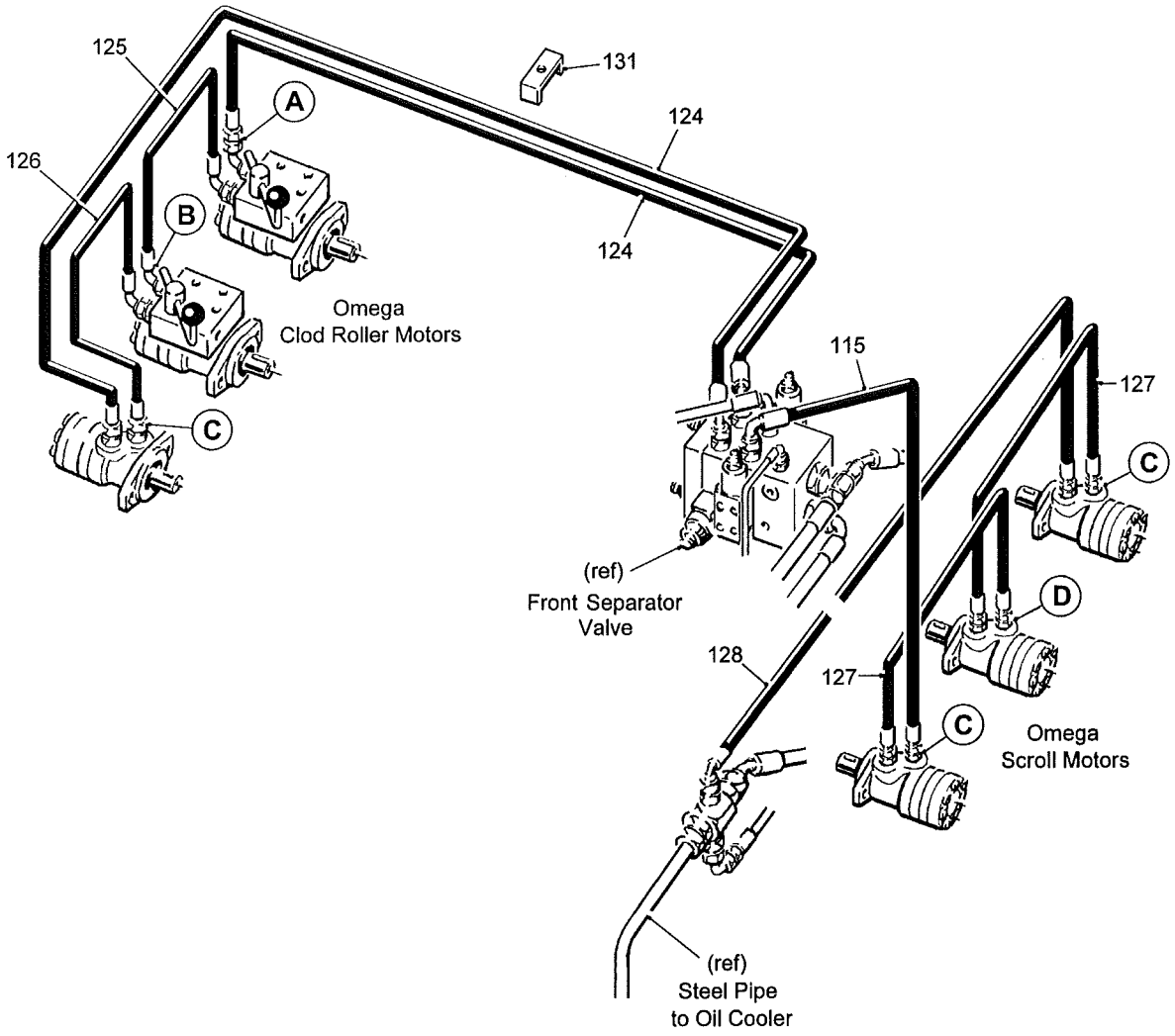

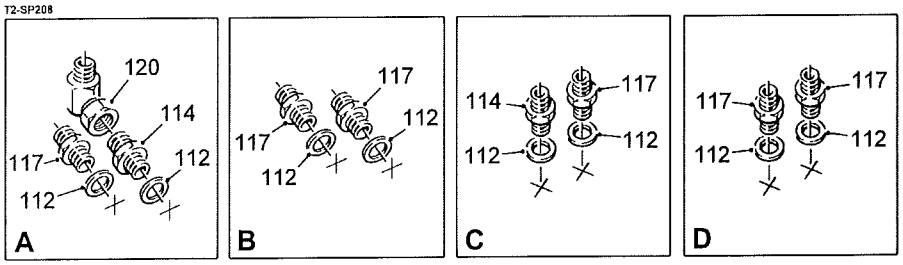

Machines from 2015

Front 3R OMEGA (220mm centres)

Assy No 62737AF

Item	Part No.	Description	Qty.	Remarks
1	22016010/020	M10x20 CSK Socket Head Screw	24	
2				
3	32037/1	Proximity Sensor	2	
4	32037/2	Sensor Cable (5m)	2	
5				
6	33130/16	Ø50 External Circlip	9	
7	44563	Hydraulic Motor	3	
8	RPH850.306210	Hydraulic Motor	3	
9				
10	55122	Sensor	2	
11	56112	Diverter Valve	2	
12				
13	56679A	Hydraulic Ram	1	
14	56690	Ram Eye	1	
15	59934C	LH Cavity Scroll (X=10mm)	19	LH Solid Scroll 59934S
	59936C	LH Cavity Scroll (X=6mm)	19	LH Solid Scroll 59936S
16	59935C	RH Cavity Scroll (X=10mm)	11	RH Solid Scroll 59935S
	59937C	RH Cavity Scroll (X=6mm)	11	RH Solid Scroll 59937S
17				
18	59338A	Ram Mounting Beam (beam axle only)	1	With water kit use 59338
19				
20	59136A/1800	Scroll Shaft	3	
21	59692	Bearing Boss	3	
22	64066	LH Carrier Plate	3	
23	64067	RH Carrier Plate	3	
24	64047	Clod Roller Bearing Mount	3	
25	64046	Clod Roller Motor Mount	3	
26				
27	64012	Sensor Disc	2	
28				
29	59153B	Hydraulic Ram (33mm stroke)	2	
30				
31				
32	59162	Pivot Pin	6	
33	59163	Pivot Flange Bush	6	
34	59164/1800	Clod Roller Scraper	3	
35	59165/1800	Clod Roller Lift Shaft	1	
36	59166	Clod Roller Lift Arm	1	
37	59693	Connecting Link (3 roller)	2	
38	59171	LH Link	1	
39	59172	RH Link	1	
40				
41	59174	Shoulder Bolt (long)	6	
42	59175	Pivot Flange Bush	12	
43	59176	Tapped Boss (long)	2	
44	59177	Tapped Boss (short)	2	
45				
46	59927/1800	Ø63 Ebonite Clod Roller	3	Option
	62841/1800	Ø60 Mild Steel Clod Roller	3	Option
	62753/1800	Ø60 Stainless Steel Clod Roller	3	Option
	62864/1800	Ø63 Rubber Clod Roller	3	Option

Machines from 2015

Front 3R OMEGA (220mm centres)

Assy No 62737AF

Item	Part No.	Description	Qty.	Remarks
47	59529	Motor Mount	3	
48	59348	End Cap (Ø45 bore)	3	
48a	59348A	End Cap (Ø50 bore)	3	
49	59928	Motor Boss	3	
50	59352	Carrier Plate Tie	6	
51	59696B	3 Roller Omega Frame (Y = 220mm)	1	
52				
53				
54	62797	Ram Body Pin	2	
55	59359	Ram Piston Pin	2	
56	62912	Sensor Bracket	1	
57	64013	Sensor Bracket	1	
58	59396	Ø42 Exhaust Clamp	1	
59	59397	Ø60 Exhaust Clamp	1	
60	59398	Ø42 Ram Body Bracket	1	
61	59399	Ø42 Ram Piston Bracket	1	
62	59400B	Ø60 Ram Body Bracket	1	
63	59401A	Ø60 Ram Piston Bracket	1	
64				
65	60102RS	Bearing	6	
66				
67				
68	DW25131	Compression Spring	6	
69				
70	LFTC35A	Bearing	3	
71				
72				
73	RPC648.061001	Grease Nipple 45°	5	
74				
75				
76				
77				
78				
79				
80				
81				
82	6006RS	Bearing	6	
83	W0111	Ø55 Internal Circlip	3	
84	W0117	Ø45 External Circlip	3	
85	W0161	Ø80 Internal Circlip	6	
86				
87				
88				
89				
90				
91	SS040011/003	Steel Spacer	3	
92				
93				
94				
95				
96	62650	LH Deflector Plate (long)	3	
97	62651	RH Deflector Plate (long)	3	
98	62706	LH Stainless Side Panel	1	For double transfer roller
	62706A	LH Stainless Side Panel	1	For triple transfer roller

Machines from 2015

Front 3R OMEGA (220mm centres) Assy No 62737AF

Item	Part No.	Description	Qty.	Remarks
99	62707	RH Stainless Side Panel	1	For double transfer roller
	62707A	RH Stainless Side Panel	1	For triple transfer roller
100	62744	Stainless Panel (double transfer roller)	2	Used with roller table only
	62744A	Stainless Panel (triple transfer roller)	2	Used with roller table only
101	62903	LH Adjuster	3	
102	62904	RH Adjuster	3	
103	64097LH	Adjuster Strap LH	1	
104	64097RH	Adjuster Strap RH	1	
105	62908	Adjuster Boss	2	
106	62913A	Adjuster Plate	2	
107	62914	Indicator Plate	2	
108				
109	62713	Pivot Bracket LH	1	
110	62714	Pivot Bracket RH	1	
111	62796A	Pivot Plate	4	Beam axle only
	62826	Pivot Plate	4	Goal post axle only
		Hydraulic Components Consist Of:		
112	11124	1/2"BSP Dowty Seal	12	
113				
114	11295	1/2"BSPx3/4"BSP M M Adaptor	4	
115	11744	3/4"Hose Assembly (1400mm)	1	
116				
117	12315	1/2"BSP M M Adaptor	8	
118				
119				
120	41115	3/4"BSP M F Compact 90°Adaptor	1	
121				
122				
123				
124	60268	3/4"Hose Assembly (3200mm)	2	
125	60431	1/2"Hose Assembly (450mm)	1	
126	60490	1/2"Hose Assembly (500mm)	1	
127	60566	1/2"Hose Assembly (500mm)	2	
128	60675	3/4"Hose Assembly (2000mm)	1	
129				
130				
131	62966	Hose Clamp	3	

Machines from 2016

Rear 3R OMEGA (220mm centres)

Assy No 62737AR

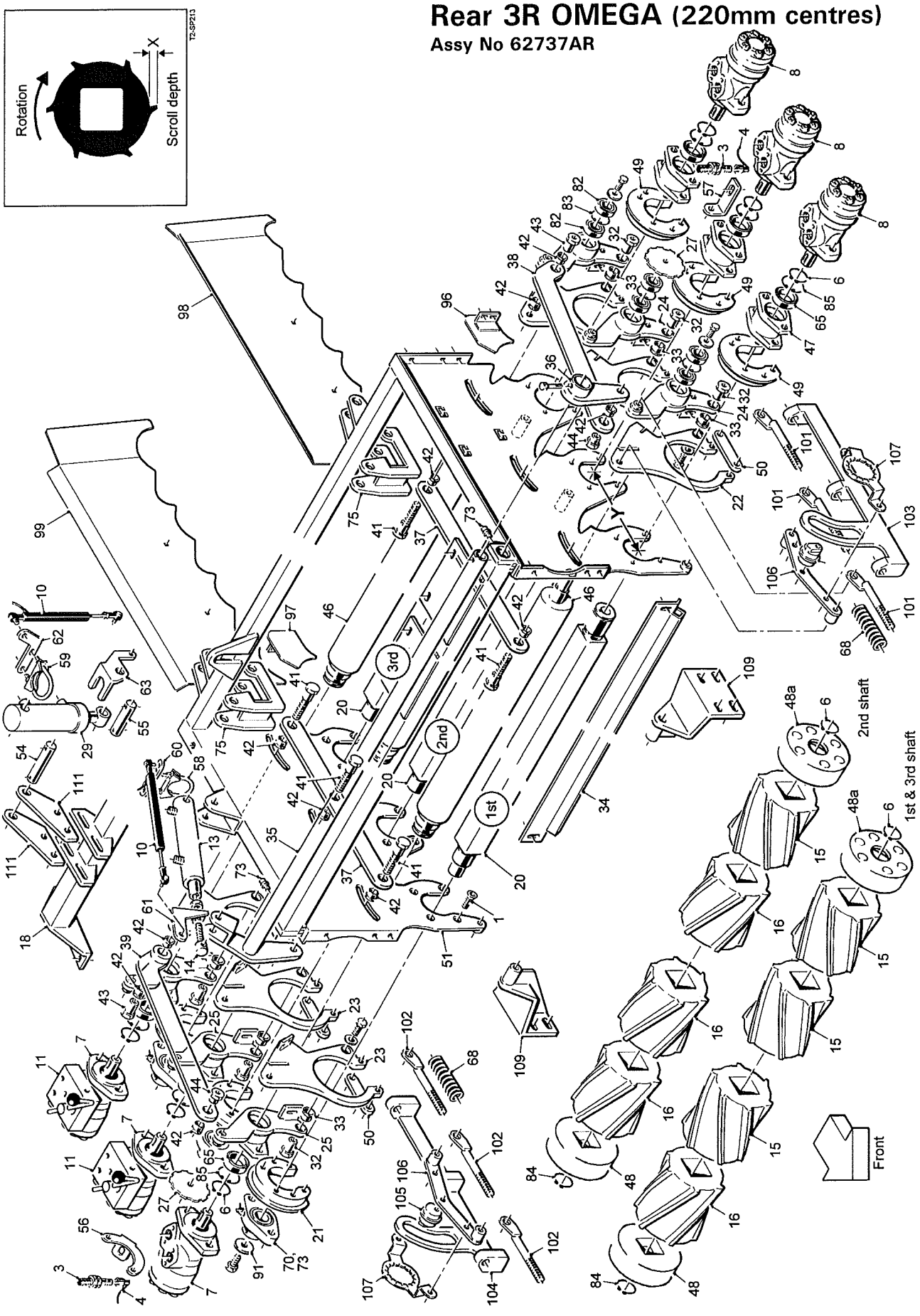

Machines from 2016

Rear 3R OMEGA (220mm centres)

Assy No 62737AR

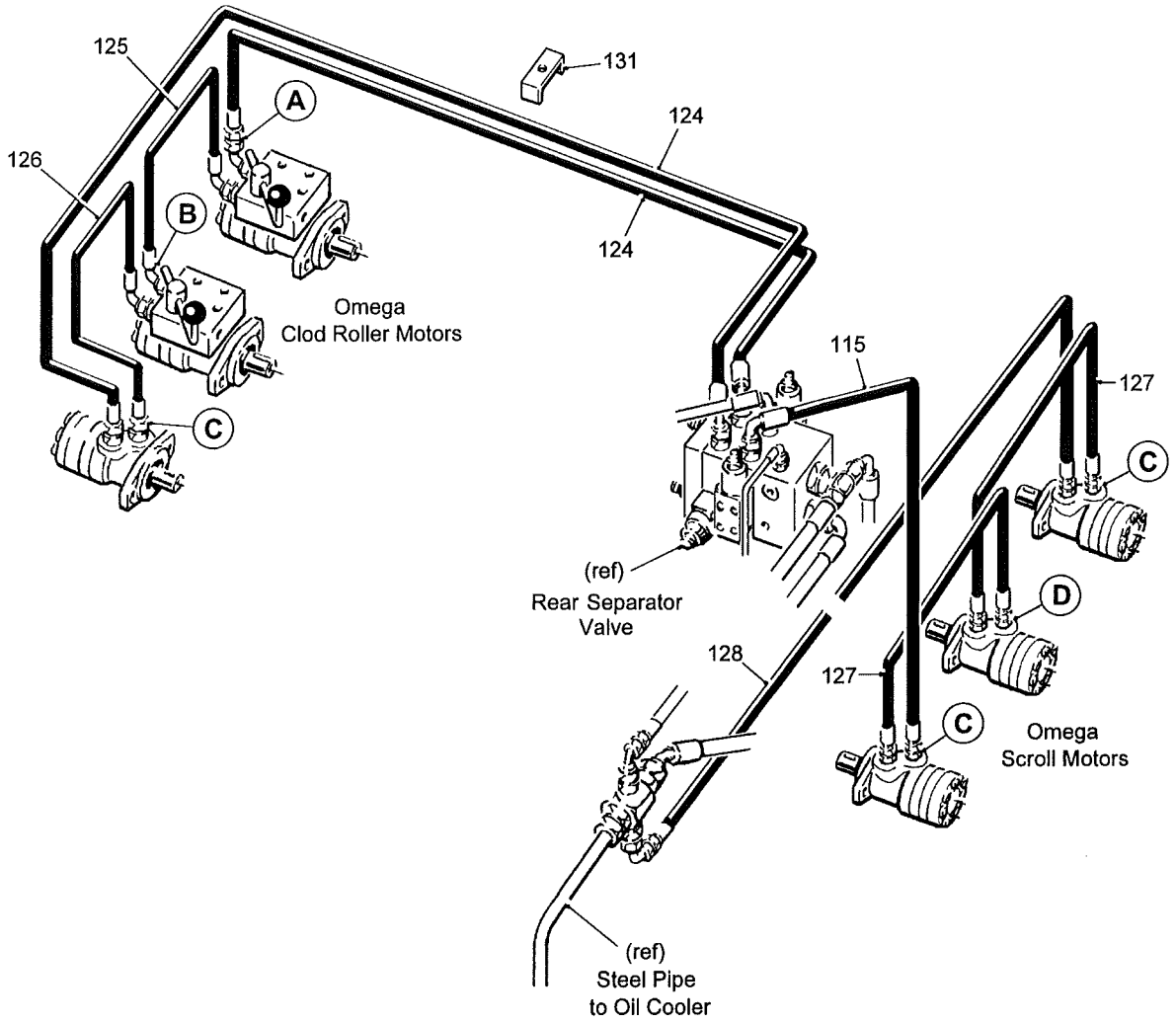

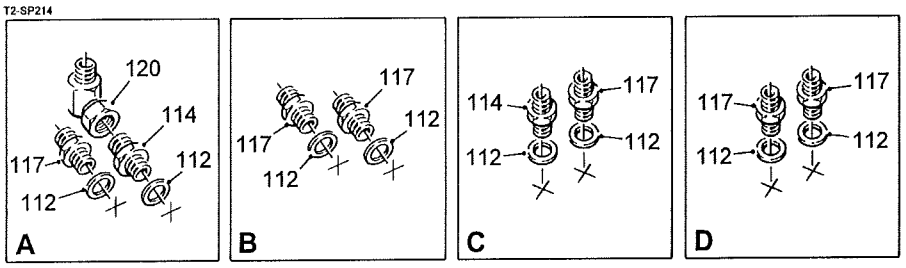

Machines from 2016

Rear 3R OMEGA (220mm centres)

Assy No 62737AR

Item	Part No.	Description	Qty.	Remarks
1	22016010/020	M10x20 CSK Socket Head Screw	24	
2				
3	32037/1	Proximity Sensor	2	
4	32037/2	Sensor Cable (5m)	2	
5				
6	33130/16	Ø50 External Circlip	9	
7	44563	Hydraulic Motor	3	
8	RPH850.306210	Hydraulic Motor	3	
9				
10	55122	Sensor	2	
11	56112	Diverter Valve	2	
12				
13	56679A	Hydraulic Ram	1	
14	56690	Ram Eye	1	
15	59934C	LH Cavity Scroll (X=10mm)	19	LH Solid Scroll 59934S
	59936C	LH Cavity Scroll (X=6mm)	19	LH Solid Scroll 59936S
16	59935C	RH Cavity Scroll (X=10mm)	11	RH Solid Scroll 59935S
	59937C	RH Cavity Scroll (X=6mm)	11	RH Solid Scroll 59937S
17				
18	59338B	Ram Mounting Beam	1	
19				
20	59136A/1800	Scroll Shaft	3	
21	59692	Bearing Boss	3	
22	64066	LH Carrier Plate	3	
23	64067	RH Carrier Plate	3	
24	64047	Clod Roller Bearing Mount	3	
25	64046	Clod Roller Motor Mount	3	
26				
27	64012	Sensor Disc	2	
28				
29	59153	Hydraulic Ram (75mm stroke)	2	
30				
31				
32	59162	Pivot Pin	6	
33	59163	Pivot Flange Bush	6	
34	59164/1800	Clod Roller Scraper	3	
35	59165/1800	Clod Roller Lift Shaft	1	
36	59166	Clod Roller Lift Arm	1	
37	59693	Connecting Link (3 roller)	2	
38	59171	LH Link	1	
39	59172	RH Link	1	
40				
41	59174	Shoulder Bolt (long)	6	
42	59175	Pivot Flange Bush	12	
43	59176	Tapped Boss (long)	2	
44	59177	Tapped Boss (short)	2	
45				
46	59927/1800	Ø63 Ebonite Clod Roller	3	Option
	62841/1800	Ø60 Mild Steel Clod Roller	3	Option
	62753/1800	Ø60 Stainless Steel Clod Roller	3	Option
	62864/1800	Ø63 Rubber Clod Roller	3	Option

Machines from 2016

Rear 3R OMEGA (220mm centres)

Assy No 62737AR

Item	Part No.	Description	Qty.	Remarks
47	59529	Motor Mount	3	
48	59348	End Cap (Ø45 bore)	3	
48a	59348A	End Cap (Ø50 bore)	3	
49	59928	Motor Boss	3	
50	59352	Carrier Plate Tie	6	
51	59696B	3 Roller Omega Frame (Y = 220mm)	1	
52				
53				
54	62797	Ram Body Pin	2	
55	59358	Ram Pin	2	
56	62912	Sensor Bracket	1	
57	64013	Sensor Bracket	1	
58	59396	Ø42 Exhaust Clamp	1	
59	59397	Ø60 Exhaust Clamp	1	
60	59398	Ø42 Ram Body Bracket	1	
61	59399	Ø42 Ram Piston Bracket	1	
62	59400	Ø60 Ram Body Bracket	1	
63	59401A	Ø60 Ram Piston Bracket	1	
64				
65	60102RS	Bearing	6	
66				
67				
68	DW25131	Compression Spring	6	
69				
70	LFTC35A	Bearing	3	
71				
72				
73	RPC648.061001	Grease Nipple 45°	5	
74				
75	64206	Ram Bracket	1	
76				
77				
78				
79				
80				
81				
82	60062RS	Bearing	6	
83	W0111	Ø55 Internal Circlip	3	
84	W0117	Ø45 External Circlip	3	
85	W0161	Ø80 Internal Circlip	6	
86				
87				
88				
89				
90				
91	SS040011/003	Steel Spacer	3	
92				
93				
94				
95				
96	62652	LH Deflector Plate (short)	3	
97	62653	RH Deflector Plate (short)	3	
98	62738	LH Stainless Side Panel	1	
99	62739	RH Stainless Side Panel	1	

Machines from 2016

Rear 3R OMEGA (220mm centres)

Assy No 62737AR

Item	Part No.	Description	Qty.	Remarks
100				
101	62903	LH Adjuster	3	
102	62904	RH Adjuster	3	
103	64097LH	Adjuster Strap LH	1	
104	64097RH	Adjuster Strap RH	1	
105	62908	Adjuster Boss	2	
106	62913A	Adjuster Plate	2	
107	62914	Indicator Plate	2	
108				
109	62743	Pivot Bracket	2	
110				
111	62796A	Pivot Plate	4	
		Hydraulic Components Consist Of:		
112	11124	1/2"BSP Dowty Seal	12	
113				
114	11295	1/2"BSPx3/4"BSP M M Adaptor	4	
115	11744	3/4"Hose Assembly (1400mm)	1	
116				
117	12315	1/2"BSP M M Adaptor	8	
118				
119				
120	41115	3/4"BSP M F Compact 90°Adaptor	1	
121				
122				
123				
124	60268	3/4"Hose Assembly (3200mm)	2	
125	60431	1/2"Hose Assembly (450mm)	1	
126	60490	1/2"Hose Assembly (500mm)	1	
127	60566	1/2"Hose Assembly (500mm)	2	
128	*****	3/4"Hose Assembly (****mm)	1	
129				
130				
131	62966	Hose Clamp	3	

Machines from Serial No T2-168

2R OMEGA (behind 975mm roller table)

Assy No 59099A

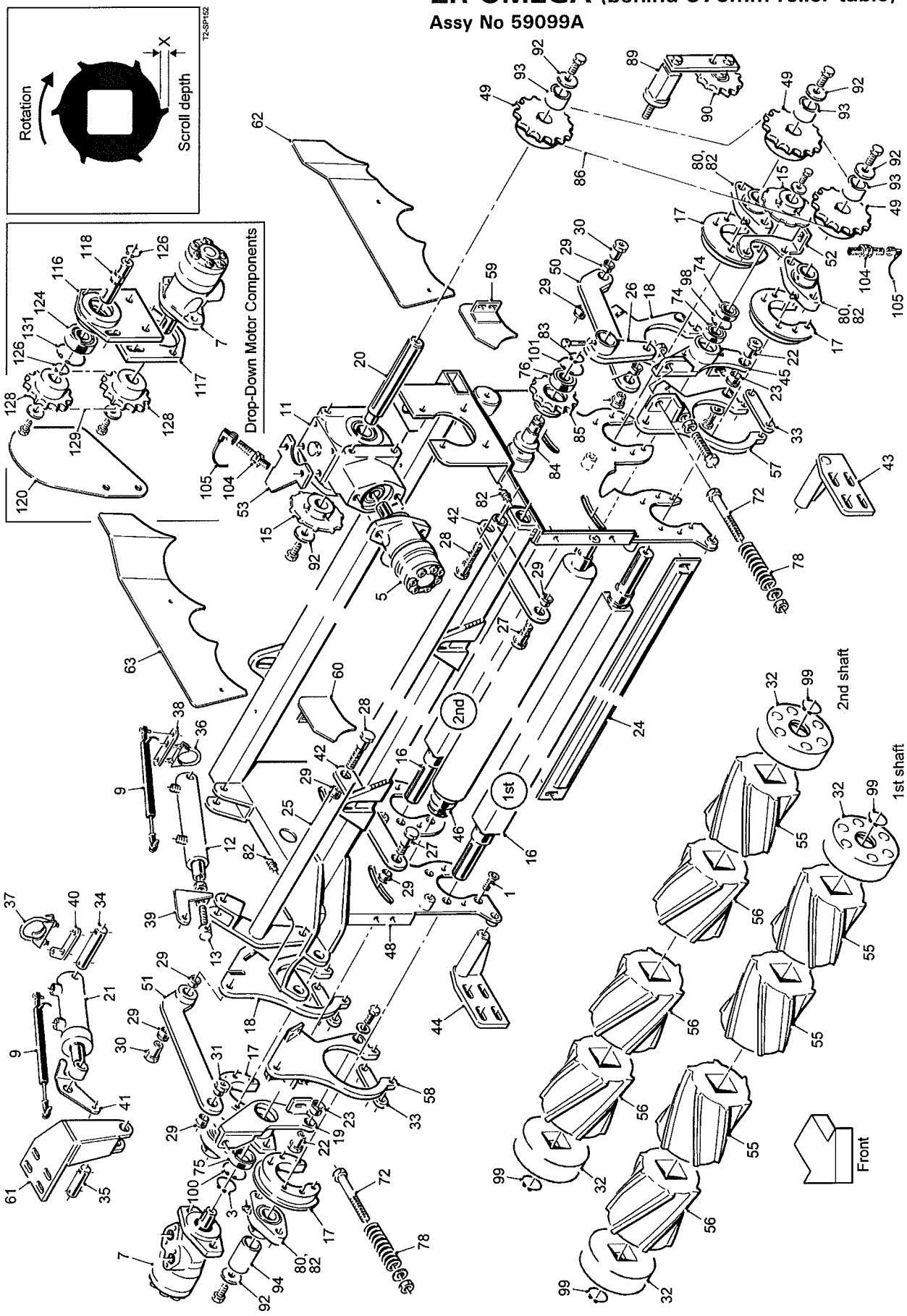

Machines from Serial No T2-168

2R OMEGA (behind 975mm roller table)

Assy No 59099A

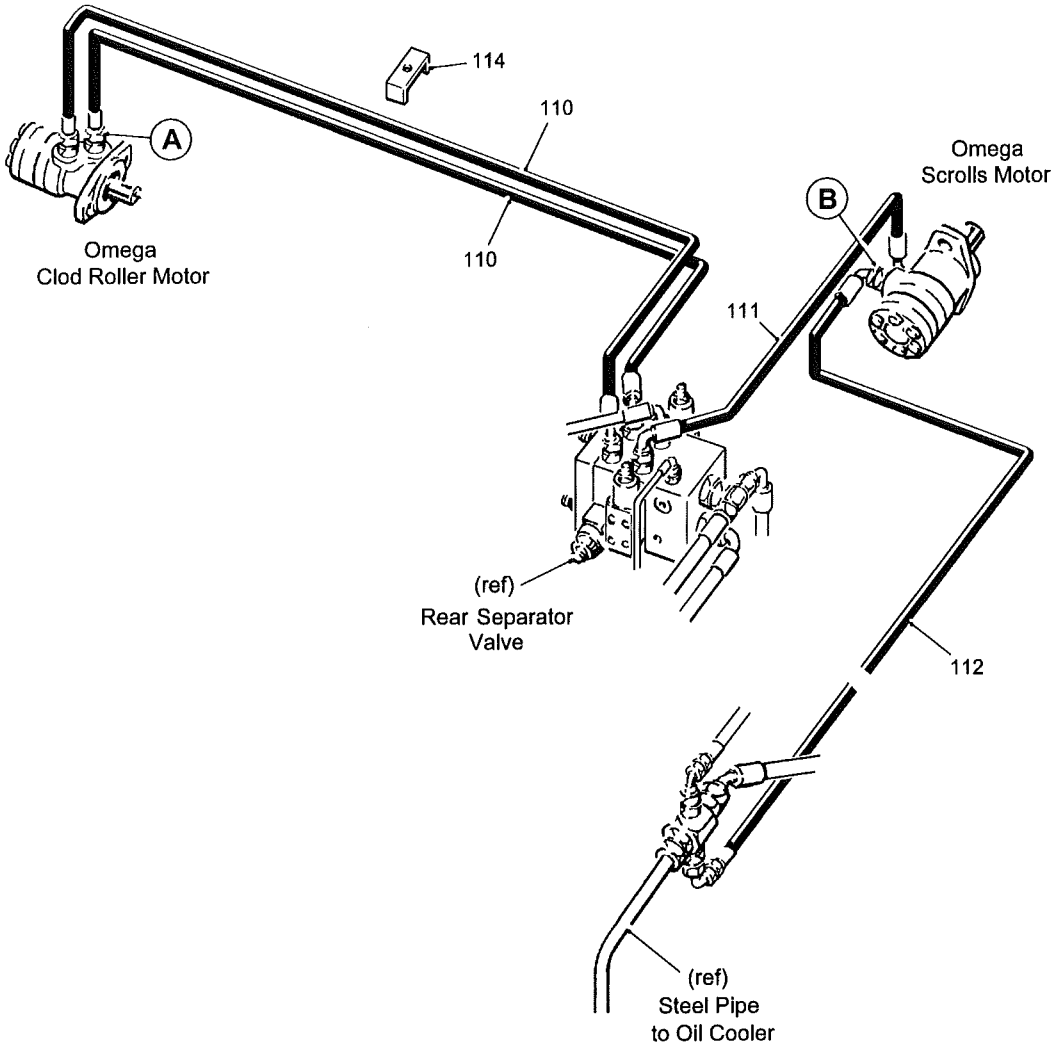

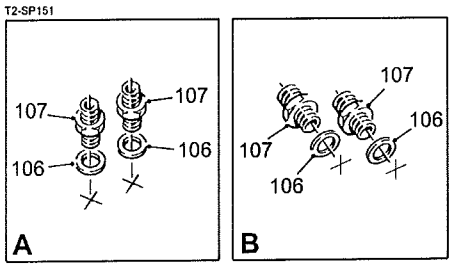

Machines from Serial No T2-168

2R OMEGA (behind 975mm roller table) Assy No 59099A

Item	Part No.	Description	Qty.	Remarks
1	22016010/020	M10x20 CSK Socket Head Screw	16	
2				
3	33130/16	Ø50 External Circlip	1	
4				
5	37897	Hydraulic Motor	1	
6				
7	44563	Hydraulic Motor	1	
8				
9	55122	Linear Sensor	2	
10				
11	56641	Gearbox Assembly	1	
12	56679	Hydraulic Ram	1	
13	56690	Ram Eye	1	
14				
15	59151	Sensor Disc	2	
16	59136/1800	Scroll Shaft	2	
17	59143	Bearing Boss	4	
18	59144/1	Carrier Plate (rear shaft)	2	
19	59148	RH Clod Roller Plate	1	
20	59152	Gearbox Shaft	1	
21	59153A	Hydraulic Ram (43mm stroke)	1	
22	59162	Pivot Pin	2	
23	59163	Pivot Flange Bush	2	
24	59164/1800	Clod Roller Scraper	1	
25	59165/1800	Clod Roller Lift Shaft	1	
26	59166	Lift Arm	1	
27	59173	Shoulder Bolt (short)	2	
28	59174	Shoulder Bolt (long)	2	
29	59175	Pivot Flange Bush	10	
30	59176	Tapped Boss (long)	2	
31	59177	Tapped Boss (short)	2	
32	59348	End Cap	4	Steel End Cap 59348S
33	59352	Carrier Plate Tie	4	
34	59358A	Ram Pivot Pin (long)	1	
35	59359	Ram Pivot Pin (short)	1	
36	59396	Ø42 Clamp	1	
37	59397	Ø60 Clamp	1	
38	59398	Ø42 Ram Body Bracket	1	
39	59399	Ø42 Ram Piston Bracket	1	
40	59400	Ø60 Ram Body Bracket	1	
41	59401	Ø60 Ram Piston Bracket	1	
42	59429	Connecting Link (2 hole)	2	
43	59697A	LH Mounting Bracket	1	
44	59698A	RH Mounting Bracket	1	
45	59708	LH Clod Roller Plate	1	
46	59709/1800	Ø76 Ebonite Clod Roller	1	Option
	59714/1800	Ø76 Mild Steel Clod Roller	1	Option
	59715/1800	Ø73 Stainless Steel Clod Roller	1	Option
47				
48	59725A	2 Roller Omega Frame	1	
49	59767	23T 3/4"Pitch Sprocket	3	
50	59921	LH Link	1	
51	59922	RH Link	1	
52	59361A	Sensor Bracket	1	

Machines from Serial No T2-168

2R OMEGA (behind 975mm roller table) Assy No 59099A

Item	104Part No.	Description	Qty.	Remarks
53	59362	Sensor Bracket	1	
54				
55	59934S	LH Scroll (X = 10mm)	10	
	59936S	LH Scroll (X = 6mm)	10	
56	59935S	RH Scroll (X = 10mm)	10	
	59937S	RH Scroll (X = 6mm)	10	
57	62648	LH Carrier Plate (front shaft)	1	
58	62649	RH Carrier Plate (front shaft)	1	
59	62652	LH Deflector Plate (short)	1	
60	62653	RH Deflector Plate (short)	1	
61	62742A	Ram Pivot Bracket	1	
62	62751	LH Stainless Panel	1	
63	62752	RH Stainless Panel	1	
64				
65				
66				
67				
68				
69				
70				
71				
72	22012016/140	M16x140 Bolt	2	
73				
74	6006RS	Bearing	2	
75	60102RS	Bearing	1	
76	62052RS	Bearing	1	
77				
78	DW25131	Compression Spring	2	
79				
80	LFTC35A	Bearing	4	
81				
82	RPC648.061001	M6 45°Grease Nipple	6	
83	RPF200.025200	Ø25 External Circlip	1	
84	RPM178.300391	Spigot	1	
85	RPM182.300390	15T 3/4"Pitch Sprocket	1	
86	RPT732.620089	3/4"Pitch Drive Chain	1	
87				
88				
89	RPS568X	Tensioner	1	
90	RPS569	Tensioner Sprocket Complete	1	
91				
92	SS040011/003	Steel Spacer	6	
93	SS042036/042	Steel Spacer	3	
94	SS042036/082	Steel Spacer	2	
95				
96				
97				
98	W0111	Ø55 Internal Circlip	1	
99	W0117	Ø45 External Circlip	2	
100	W0161	Ø80 Internal Circlip	1	
101	W0167	Ø52 Internal Circlip	1	
102				
103				

Machines from Serial No T2-168

2R OMEGA (behind 975mm roller table) Assy No 59099A

Item	Part No.	Description	Qty.	Remarks
104	32037/1	Proximity Sensor	2	
105	32037/4	Sensor Cable (10m)	2	
		Hydraulic Components Consist Of:		
106	11124	1/2"BSP Dowty Seal	4	
107	11295	1/2"BSPx3/4"BSP M M Adaptor	4	
108				
109				
110	60268	3/4"Hose Assembly (3200mm)	2	
111	60659	3/4"Hose Assembly (600mm)	1	
112	60660	3/4"Hose Assembly (2200mm)	1	
113				
114	62966	Pipe Clamp	3	
115				
		Drop-Down Motor Components Consist Of:		
116	56814	Motor Adaptor Plate	1	
117	56815	Motor Plate	1	
118	56816	Coupling Shaft	1	
119				
120	64056	Drive Shield	1	
121				
122				
123				
124	63052RS	Bearing	1	
125				
126	PS843	Ø25 External Circlip	2	
127				
128	RPM182.306832	15T 3/4"Pitch Sprocket	2	
129	RPT732.620034	3/4"Pitch Drive Chain	1	
130				
131	W0168	Ø62 Internal Circlip	1	

Machines from 2015

Roller Table Separator

Assy No 59050

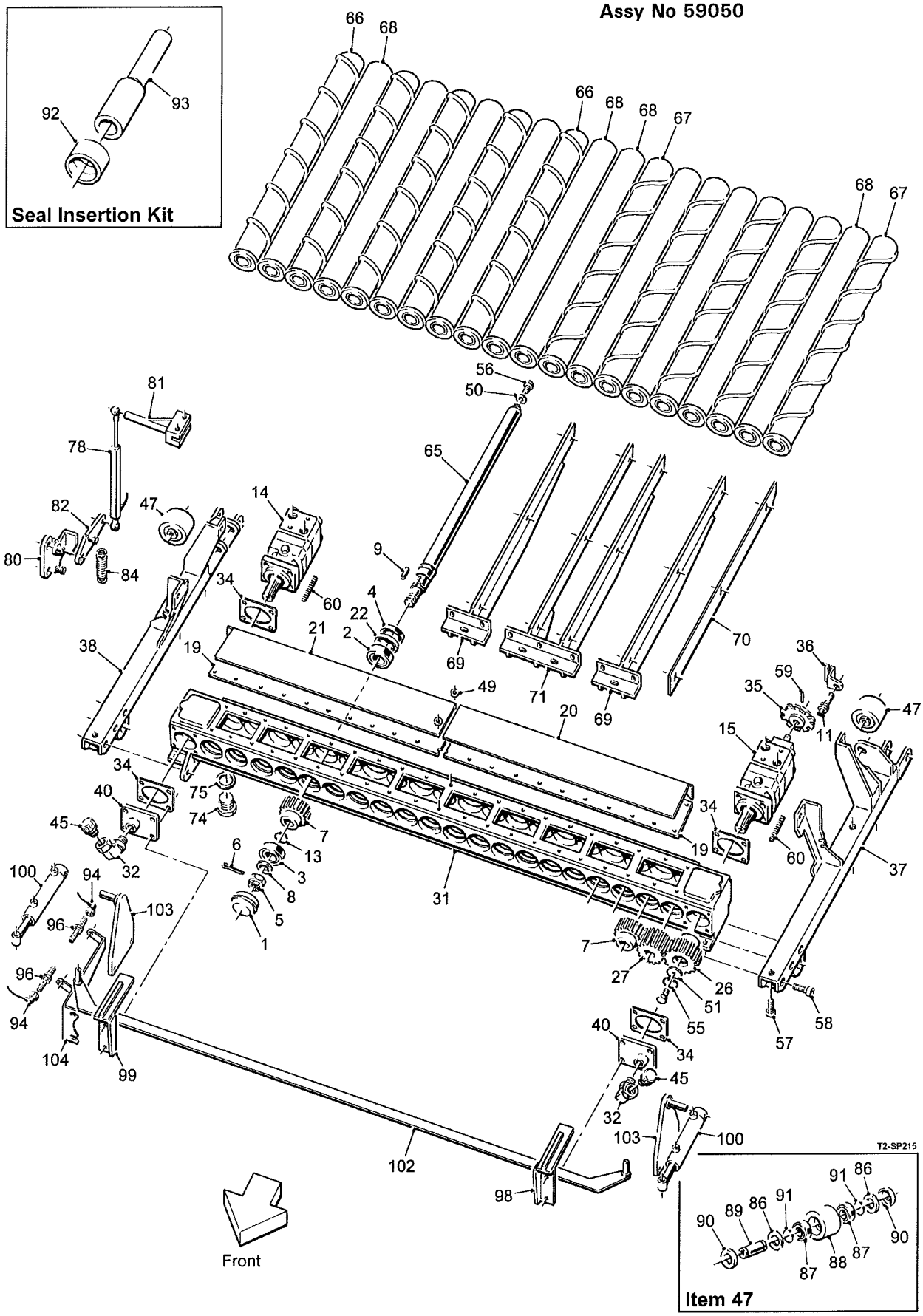

Machines from 2015

Roller Table Separator

Assy No 59050

Item	Part No.	Description	Qty.	Remarks
1	27841	End Cap	20	
2	27843	Bearing Cup & Cone	20	
3	27844	Bearing Cup & Cone	20	
4	27895A	Oil Seal	20	
5	27917	Slotted Nut	20	
6	27918	Split Pin	22	
7	27937	35T Gear	18	
8	27942	Flat Washer	20	
9	27948	RBE Key	20	
10				
11	32037/1	Proximity Sensor	1	
12				
13	37086	1 1/2" External Circlip	20	
14	37754	Hydraulic Motor	1	
15	37754A	Hydraulic Motor (with tacho shaft)	1	
16				
17				
18				
19	46333-20	Gearbox Cover Plate	2	
20	46334-20LH	LH Stainless Steel Panel	1	
21	46334A-20RH	RH Stainless Steel Panel	1	
22	46406	Steel Spacer	20	
23				
24				
25				
26	51651	45T Motor Gear	2	
27	51652	35T 1st Shaft Gear	2	
28				
29				
30				
31	59734	20 Roller Gearcase	1	
32	60705	3/4"BSP M F 90°Elbow	2	
33				
34	62465	Gasket	4	
35	62798	Sensor Disc	1	
36	62799	Sensor Mounting	1	
37	62893	LH Mounting	1	
38	62894	RH Mounting	1	
39				
40	64120	Filler/Breather Mounting	2	
41				
42				
43				
44				
45	DWS538	Filler/Breather Cap	2	
46				
47	KA16023	Ø80 Roller Assembly	2	(see list at end)
48				
49	SS020007/001	Steel Spacer	2	
50	SS030011/005	Steel Spacer	20	
51	SS050011/005	Steel Spacer	2	
52				
53				
54				
55	TH00932252	Ø50 Internal Circlip	2	

Machines from 2015

Roller Table Separator

Assy No 59050

Item	Part No.	Description	Qty.	Remarks
56	22011010/025	M10x25 Setscrew	20	
57	22015010/030	M10x30 Cap Head Screw	2	
58	22015012/030	M12x30 Cap Head Screw	6	
59	22067003/020	Ø3x20 Roll Pin	1	
60	22106010/055	M10x55 Motor Stud	8	
61				
62				
63				
64				
65	59622	Roller Shaft (800mm)	20	
	27840S	Roller Shaft (975mm)	20	
66	59623LGSR	800mm Ø75/Ø95 LH Spiral Roller	5	
	59623LSG	800mm Ø80/Ø95 LH Spiral Roller	5	
	37057E	975mm Ø75/Ø95 LH Spiral Roller	5	
	37783B	975mm Ø80/Ø95 LH Spiral Roller	5	
	64158SLH	800mm Steel LH Spiral Roller	5	
67	59623RGSR	800mm Ø75/Ø95 RH Spiral Roller	5	
	59623RSG	800mm Ø80/Ø95 RH Spiral Roller	5	
	37057A	975mm Ø75/Ø95 RH Spiral Roller	5	
	37783A	975mm Ø80/Ø95 RH Spiral Roller	5	
	64158SRH	800mm Steel RH Spiral Roller	5	
68	59624B	800mm Ø82 Plain Roller	10	
	59624C	800mm Ø74 Plain Roller	10	
	37057B	975mm Ø82 Plain Roller	10	
	37057C	975mm Ø74 Plain Roller	10	
	64158A	800mm Ø2.75" Steel Plain Roller	10	
	64158B	800mm Ø3" Steel Plain Roller	10	
	64158C	800mm Ø3.25" Steel Plain Roller	10	
69	59735	Scraper Mounting (800mm)	8	
	44779	Scraper Mounting (975mm)	8	
70	59736	Scraper Blade (800mm)	10	
	46908	Scraper Blade (975mm)	10	
71	59825	Double Scraper Mounting (800mm)	1	
	59825A	Double Scraper Mounting (975mm)	1	
72				
73				
74	11116	1"BSP Blanking Plug	1	
75	11122	1"BSP Dowty Seal	1	
76				
77				
78	55122	Sensor	1	
79				
80	62724	Sensor Link Arm Mounting	1	
81	62827	Sensor Mounting	1	
82	62828	Sensor Link Arm	1	
83				
84	KA35165	Tension Spring	1	
85				

Machines from 2015

Roller Table Separator

Assy No 59050

Item	Part No.	Description	Qty.	Remarks
	KA16023	**Ø80 Roller Assembly Consists Of:**		
86	0000300504	Felt Seal	2	
87	6005RS	Bearing	2	
88	KA16023/1	Plain Steel Roller	1	
89	KA16021/4	Open Bore Spindle	1	
90	PH408	Seal	2	
91	PS843	Ø25 External Circlip	2	
	37145	**Seal Insertion Kit Consists Of:**		
92	37146	Seal Compression Ring	1	
93	37147	Slide Hammer	1	
	64127	**Scraper Bar Assembly Consists Of:**		
94	32037/2	Sensor Cable (5m)	2	
95				
96	41504	Sensor	2	
97				
98	63110L	Scraper Retainer LH	1	
99	63110R	Scraper Retainer RH	1	
100	63113	Hydraulic Ram	2	
101				
102	64125	Scraper Bar	1	
103	64126	Ram Bracket	2	
104	64142	Sensor Mounting	1	

Machines from 2015

Additional Components for Roller Tables

Roller Table On To Omega

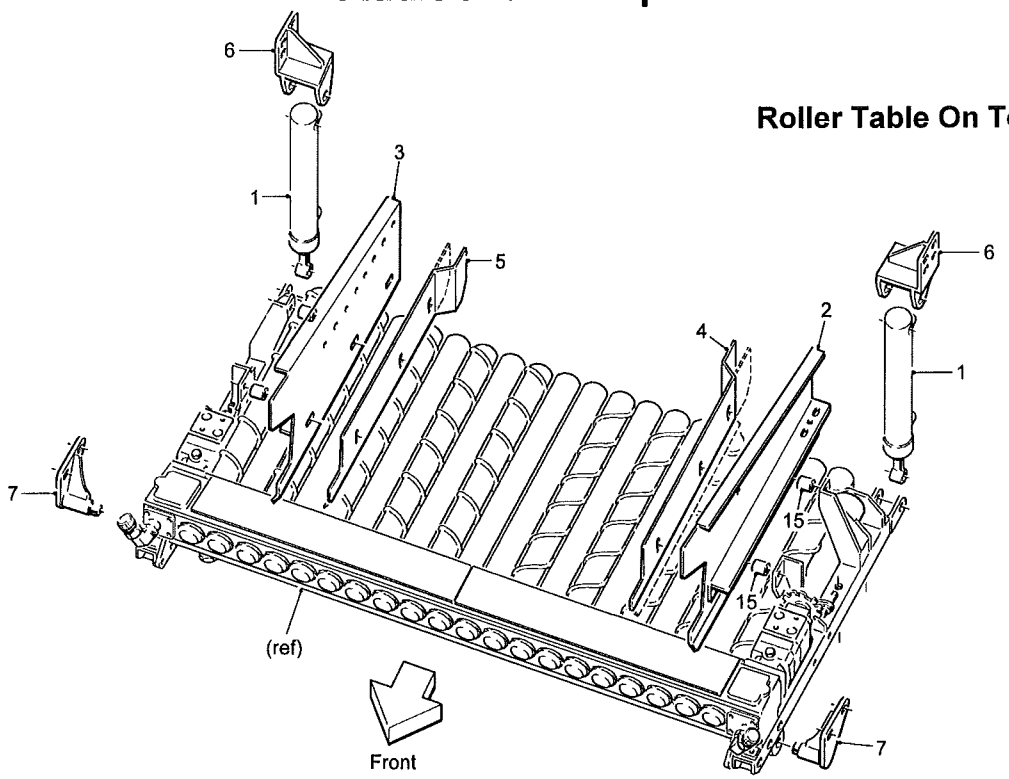

T2-SP216

Roller Table On To Spreader Web or Picking Table

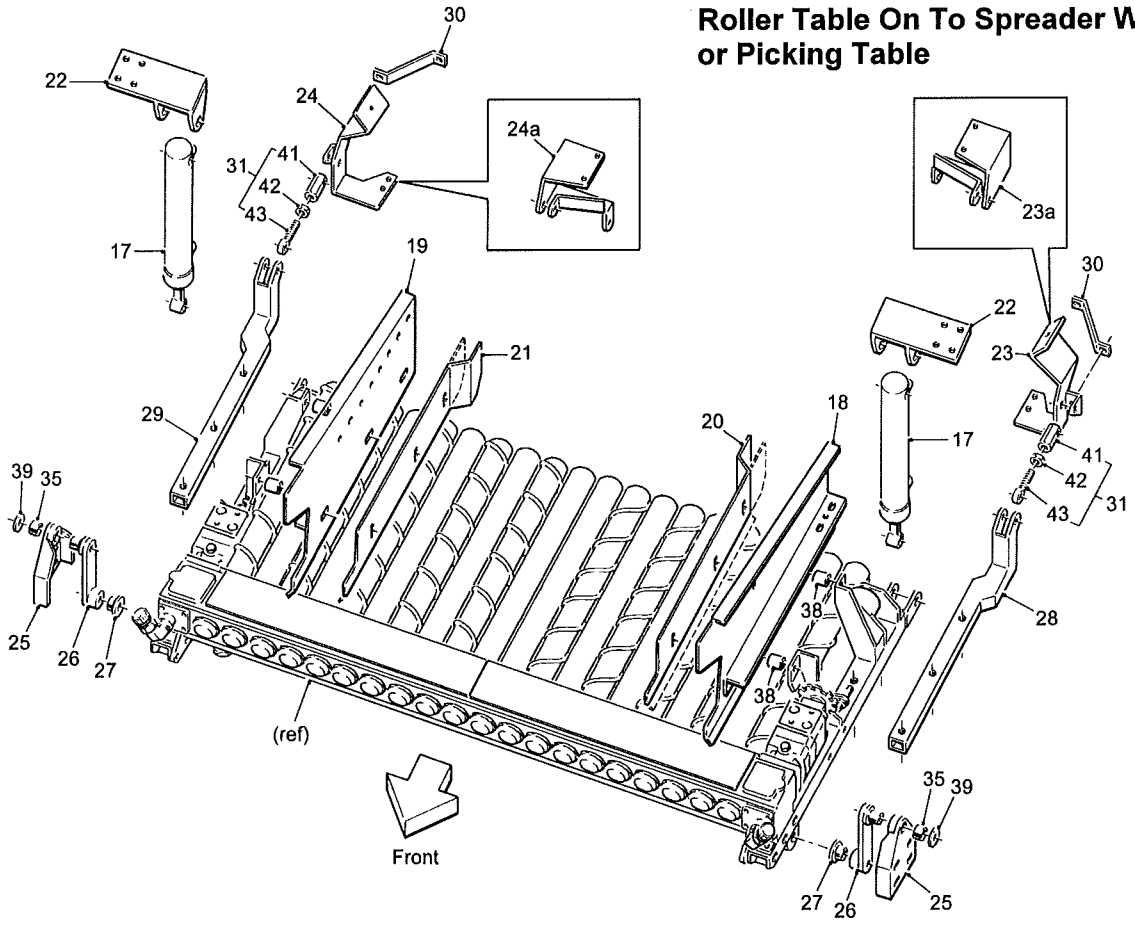

Machines from 2015

Additional Components for Roller Tables

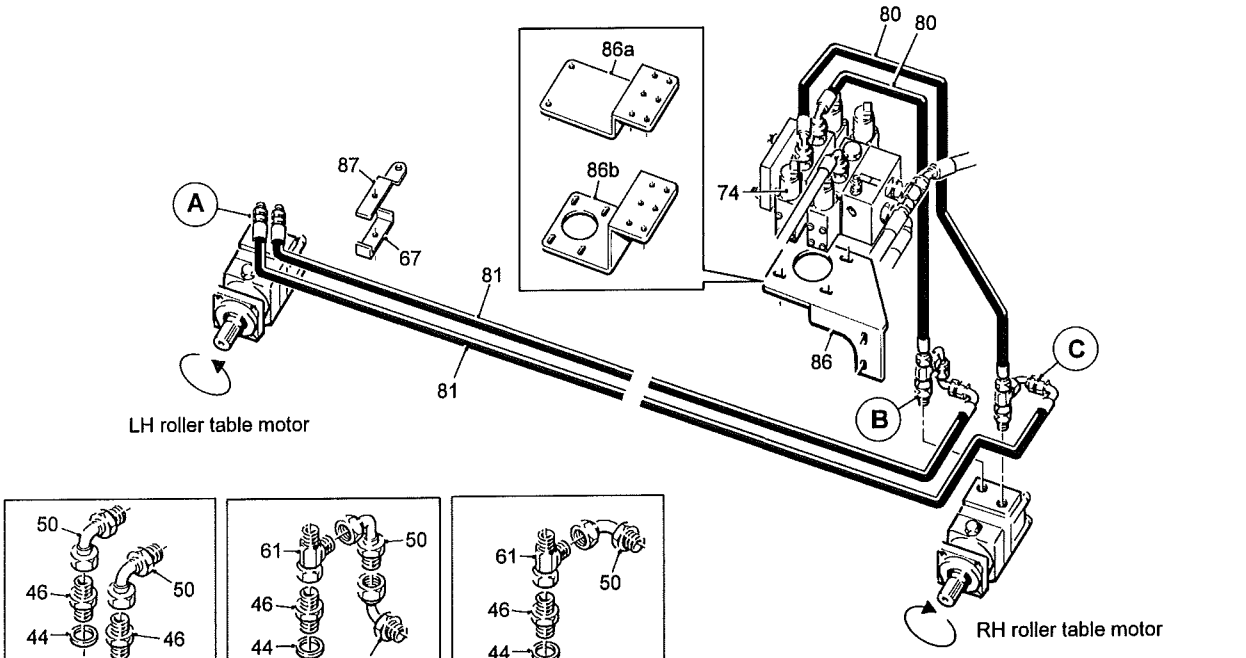

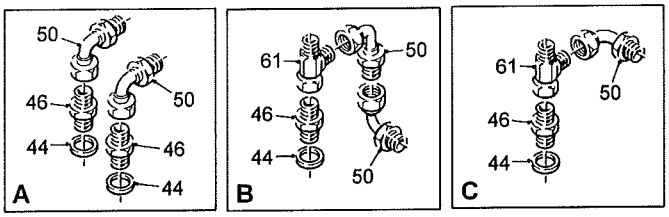

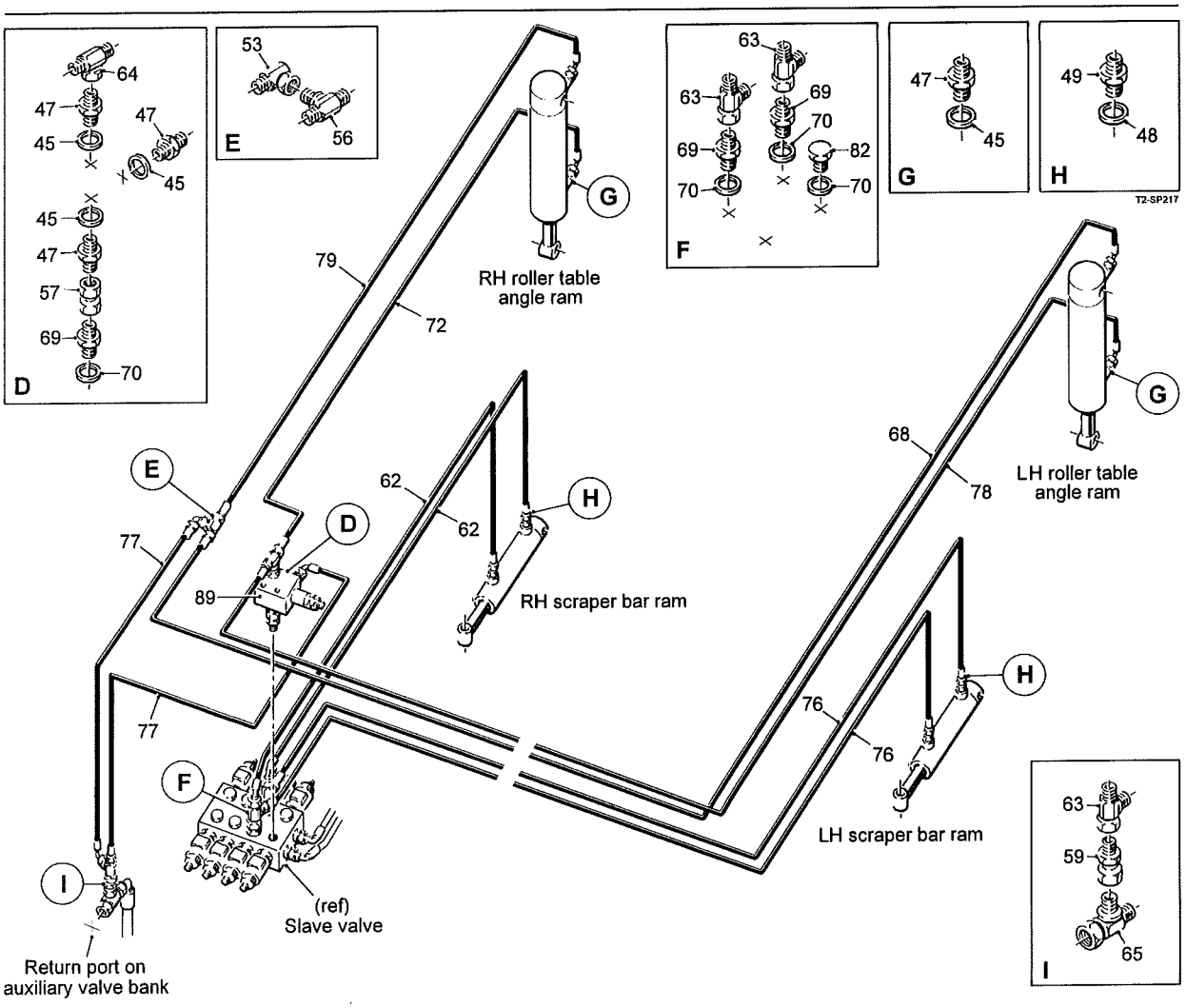

Machines from 2015

Additional Components for Roller Tables

Item	Part No.	Description	Qty.	Remarks
		Roller Table On To Omega Consists Of:		
1	61008A	Hydraulic Ram (180mm stroke 470mm c/c)	2	(800mm rollers)
	61008C	Hydraulic Ram (150mm stroke)	2	(975mm rollers)
	61008F	Hydraulic Ram (180mm stroke 520mm c/c)	2	(800mm rollers)
2	62716	Side Panel LH (800mm rollers)	1	
	62716A	Side Panel LH (975mm rollers)	1	
3	62717	Side Panel RH (800mm rollers)	1	
	62717A	Side Panel RH (975mm rollers)	1	
4	62718C	Stainless Panel LH (800mm rollers)	1	
	62718D	Stainless Panel LH (975mm rollers)	1	
5	62719C	Stainless Panel RH (800mm rollers)	1	
	62719D	Stainless Panel RH (975mm rollers)	1	
6	62721B	Ram Mounting (front)	2	
7	62722	Table Pivot Bracket LH	1	
8	62723	Table Pivot Bracket RH	1	
9				
10				
11				
12				
13				
14				
15	SS030017/040	Steel Spacer	4	
	SS030017/060	Steel Spacer	4	Used with build 62762F
16				
		Roller Table On To Spreader Web or Picking Table Consists Of:		
17	61008	Hydraulic Ram (230mm stroke)	2	(800mm rollers)
	61008B	Hydraulic Ram (115mm stroke)	2	(800mm rollers)
	61008D	Hydraulic Ram (130mm stroke)	2	(975mm rollers)
18	62716	Side Panel LH (800mm rollers)	1	
	62716A	Side Panel LH (975mm rollers)	1	
19	62717	Side Panel RH (800mm rollers)	1	
	62717A	Side Panel RH (975mm rollers)	1	
20	62718C	Stainless Panel LH (800mm rollers)	1	
	62718D	Stainless Panel LH (975mm rollers)	1	
21	62719C	Stainless Panel RH (800mm rollers)	1	
	62719D	Stainless Panel RH (975mm rollers)	1	
22	62721	Ram Mounting (rear)	2	
23	62801	Link Bracket LH (for spreader web)	1	
23a	62809	Link Bracket LH (for picking table)	1	

Machines from 2015

Additional Components for Roller Tables

Item	Part No.	Description	Qty.	Remarks
24	62802	Link Bracket RH (for spreader web)	1	
24a	62810	Link Bracket RH (for picking table)	1	
25	62820	Table Pivot Bracket	2	
26	62821	Table Pivot Arm (150mm centres)	2	
	62821A	Table Pivot Arm (165mm centres)	2	
27	62822	Top Hat Spacer	2	
28	62899L	Link Arm LH	1	
29	62899R	Link Arm RH	1	
30	62907	Brace (for spreader web only)	2	
31	62919	Adjustable Pivot Link Complete	2	(see list at end)
32				
33				
34				
35	12286	Oilite Bush	2	
36				
37				
38	SS030017/040	Steel Spacer	4	
	SS030017/060	Steel Spacer	4	Used with build 62762F
39	SS040013/005	Steel Spacer	2	
40				
	62919	**Adjustable Pivot Link Consists Of:**		
41	62919A	Female Pivot	1	
42	220340012	M12 Half Nut	1	
43	RPF120.112070	M12x70 Swing Bolt	1	
		Hydraulic Components Consist Of:		
44	11124	1/2"BSP Dowty Seal	4	
45	11125	3/8"BSP Dowty Seal	7	
46	11295	1/2"BSPx3/4"BSP M M Adaptor	4	
47	11336	1/4"BSPx3/8"BSP M M Adaptor	7	
48	11337	1/4"BSP Dowty Seal	4	
49	12316	1/4"BSP M M Adaptor	4	
50	12350	3/4"BSP M F Swept 90°Adaptor	5	
51				
52				
53	32474	1/4"BSP M F Compact 90°Adaptor	1	
54				
55				
56	27449	1/4"BSP M M M Tee	1	
57	27450	1/4"BSP F F Swivel Adaptor	1	
58				
59	31099	1/4"BSPMx1/2"BSPF Swivel Adaptor	1	
60				
61	32512	3/4"BSP F M M Tee	2	
62	36229	1/4"Hose Assembly (2500mm)	2	
63	37197	1/4"BSP F M M Tee	3	
64	37199	1/4"BSP M M F Tee	1	
65	37367	1/2"BSP F M M Tee	1	
66				
67	62966	Pipe Clamp	4	

Machines from 2015

Additional Components for Roller Tables

Item	Part No.	Description	Qty.	Remarks
68	44111	1/4"Hose Assembly (4800mm)	1	
69	44207	M14x1/4"BSP M M Adaptor	3	
70	44208	M14 Dowty Seal	4	
71				
72	46255	1/4"Hose Assembly (3000mm)	1	
73				
74	59107/1	Valve Section (80 Ltr/min)	1	
75				
76	60534	1/4"Hose Assembly (5340mm)	2	
77	60201	1/4"Hose Assembly (1100mm)	2	
78	60699	1/4"Hose Assembly (5200mm)	1	
79	60597	1/4"Hose Assembly (2600mm)	1	
80	60488	3/4"Hose Assembly (1050mm)	2	
81	60750	3/4"Hose Assembly (3000mm	2	Prior to 2016 was 60681
82	60710	M14 Blanking Plug	1	
83				
84				
85				
86	62464	Valve Plate	1	
86a	62830	Valve Plate	1	
86b	62830A	Valve Plate	1	
87	64041	Pipe Clamp Mount	4	
88				
89	RPS935	Pressure Relief Valve (60 bar)	1	

Machines from Serial No T2-168

Double & Triple Transfer Roller Units

Double Transfer Roller Unit Assy No 62915

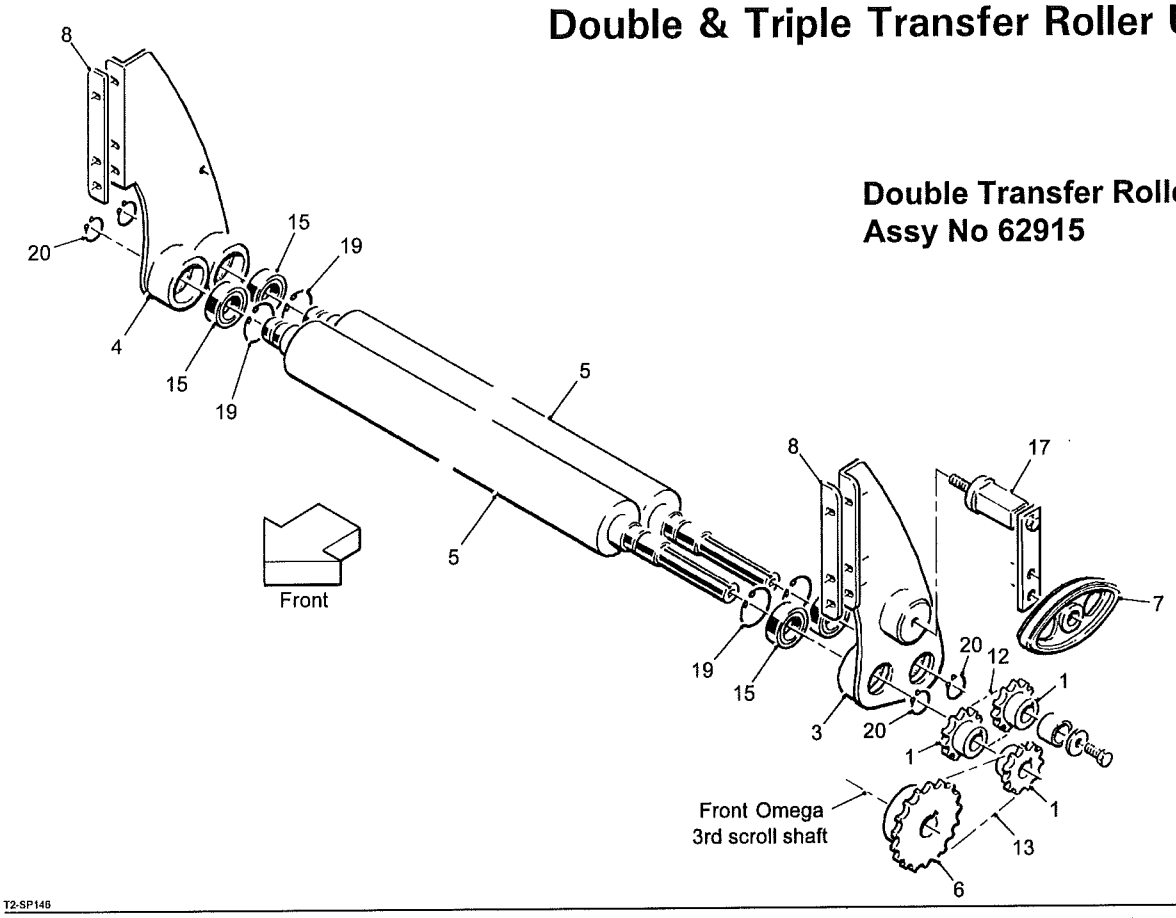

T2-SP146

Triple Transfer Roller Unit Assy No 62916

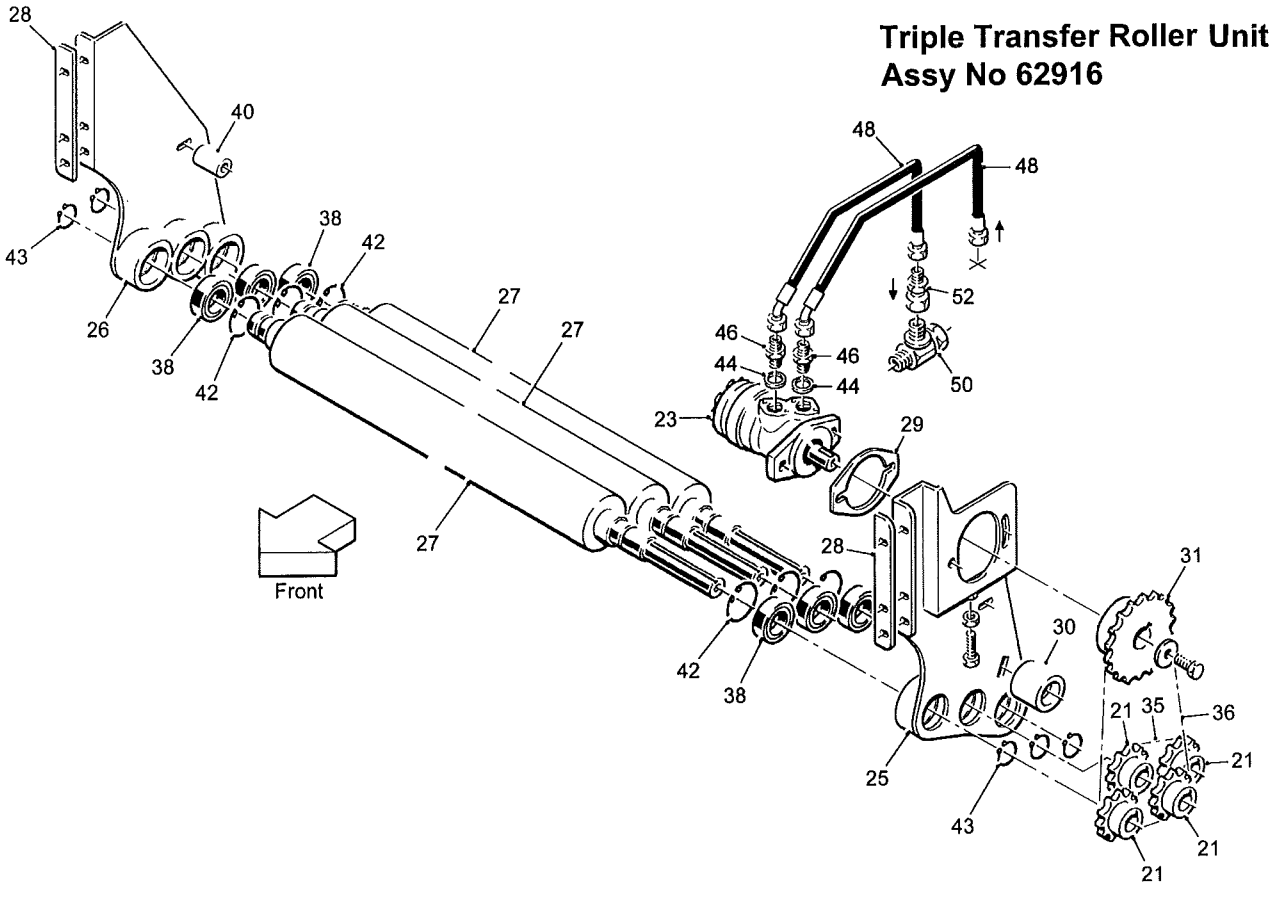

Machines from Serial No T2-168

Double & Triple Transfer Roller Units

Item	Part No.	Description	Qty.	Remarks
	62915	**Double Transfer Roller Assembly Consists Of:**		
1	44610	13T 5/8"Pitch Sprocket	3	
2				
3	62708	LH Roller Mounting	1	
4	62709	RH Roller Mounting	1	
5	62710	Steel Transfer Roller	2	
6	62711	26T 5/8"Pitch Sprocket	1	
7	62712	5/8"Pitch Chain Rider	1	
8	62795/5	5mm Spacer Plate	a/r	
	62795/10	10mm Spacer Plate	a/r	
9				
10				
11				
12	-	5/8"Pitch Drive Chain	1	
13	-	5/8"Pitch Drive Chain	1	
14				
15	60062RS	Bearing	4	
16				
17	RPS568X	Tensioner	1	
18				
19	W0111	Ø55 Internal Circlip	4	
20	W0166	Ø30 External Circlip	4	
	62916	**Triple Transfer Roller Assembly Consists Of:**		
21	44610	13T 5/8"Pitch Sprocket	4	
22				
23	46855	Hydraulic Motor	1	
24				
25	62708C	LH Roller Mounting	1	
26	62709C	RH Roller Mounting	1	
27	62710	Steel Transfer Roller	3	
28	62795/5	5mm Spacer Plate	a/r	
	62795/10	10mm Spacer Plate	a/r	
29	62832A	Motor Spacer	1	
30	62844C	Chain Tensioner Roller	1	
31	62887	26T 5/8"Pitch Sprocket	1	
32				
33				
34				
35	-	5/8"Pitch Drive Chain	1	
36	-	5/8"Pitch Drive Chain	1	
37				
38	60062RS	Bearing	6	
39				
40	SS025011/050	Steel Spacer	2	
41				
42	W0111	Ø55 Internal Circlip	6	
43	W0166	Ø30 External Circlip	6	

Machines from Serial No T2-168

Double & Triple Transfer Roller Units

Item	Part No.	Description	Qty.	Remarks
		Hydraulic Components Consisdt Of:		
44	11124	1/2"BSP Dowty Seal	2	
45				
46	12315	1/2"BSP M M Adaptor	2	
47				
48	60714	1/2"Hose Assembly (600mm)	2	
49				
50	32512	3/4"BSP F M M Tee	1	
51				
52	TBMW659	1/2"BSPMx3/4"BSPF Swivel Adaptor	1	

Machines from Serial No T2-168

OMEGA Transfer Unit (without clod roller)

Assy No 59096

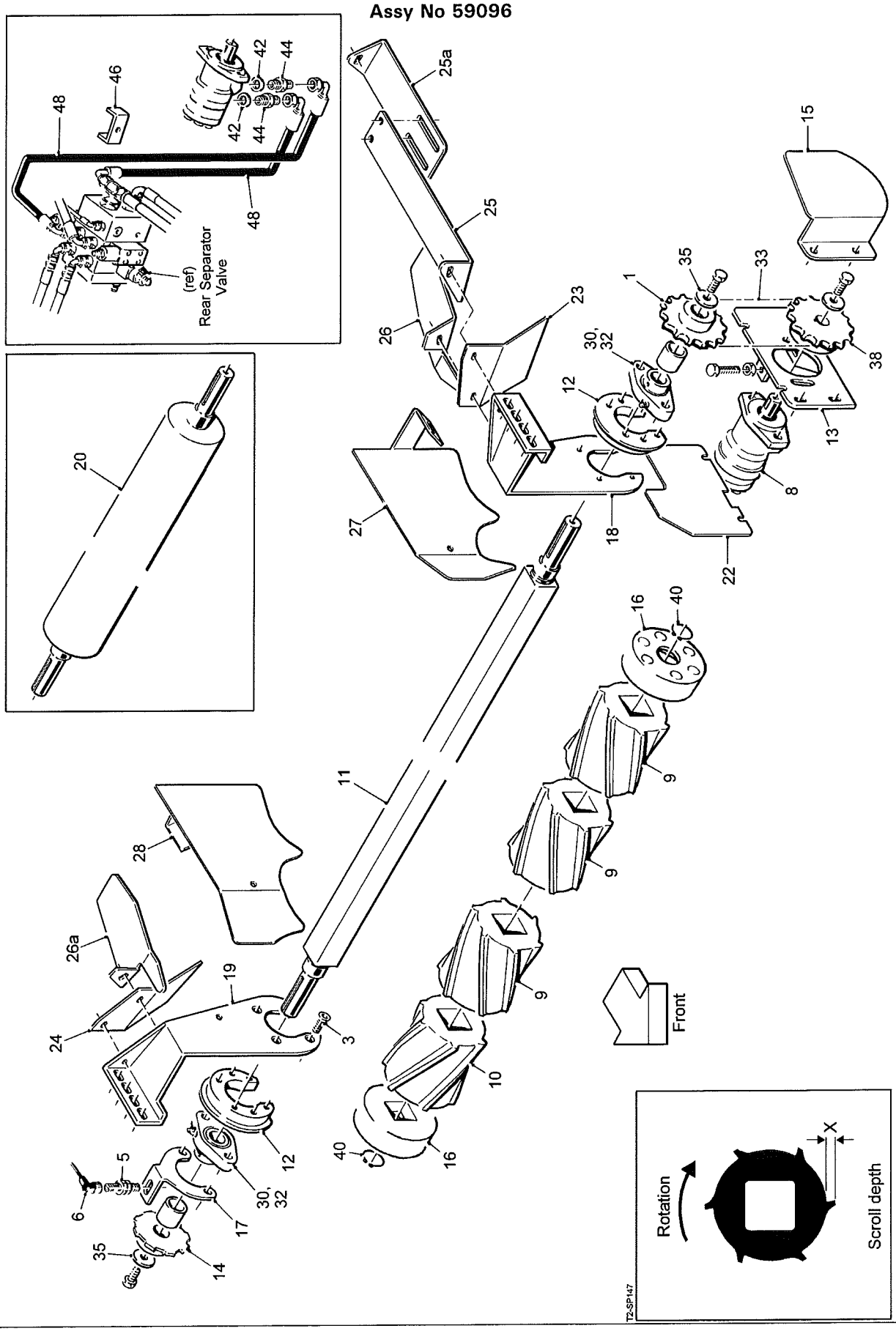

Machines from Serial No T2-168

OMEGA Transfer Unit (without clod roller) Assy No 59096

Item	Part No.	Description	Qty.	Remarks
1	11833	21T 3/4"Pitch Sprocket	1	
2				
3	22016010/020	M10x20 CSK Socket Head Screw	8	
4				
5	32037/1	Proximity Sensor	1	
6	32037/2	Sensor Cable (5m)	1	
7				
8	37897	Hydraulic Motor	1	
9	59934S	LH Scroll (X=10mm)	1	Option
	59936S	LH Scroll (X=6mm)	1	Option
10	59935S	RH Scroll (X=10mm)	9	Option
	59937S	RH Scroll (X=6mm)	9	Option
11	59136/1800	Scroll Shaft	1	
12	59143	Bearing Boss	2	
13	59157	Motor Plate	1	
14	59277	Sensor Disc	1	
15	59282	Guard	1	
16	59348	End Cap	2	Steel End Cap 59348S
17	59479B	Sensor Bracket	1	
18	59703	LH Mounting Plate	1	
19	59704	RH Mounting Plate	1	
20	59848	Ø141 Steel Transfer Roller	1	Optional
21				
22	62933	Deflector Plate	1	
23	62972	LH Guard	1	
24	62973	RH Guard	1	
25	64175	Front Infill Plate	1	
25a	64176	Rear Infill Plate	1	
26	64177	LH Infill Plate	1	
26a	64178	RH Infill Plate	1	
27	64026L	LH Deflector Panel	1	
28	64026R	RH Deflector Panel	1	
29				
30	LFTC35A	Bearing	2	
31				
32	RPC648.061001	Grease Nipple 45°	2	
33	RPT732.620048	3/4"Pitch Drive Chain	1	Part No was RPT732.620044
34				
35	SS040011/003	Steel Spacer	2	
36				
37				
38	TBMW107	21T 3/4"Pitch Sprocket	1	
39				
40	W0117	Ø45 External Circlip	2	
		Hydraulic Components Consist Of:		
42	11124	1/2"BSP Dowty Seal	2	
43				
44	12315	1/2"BSP M M Adaptor	2	
45				
46	59295	Hose Clamp	1	
47				
48	60425	1/2"Hose Assembly (1800mm)	2	

Machines from 2016

1125mm Discharge Elevator

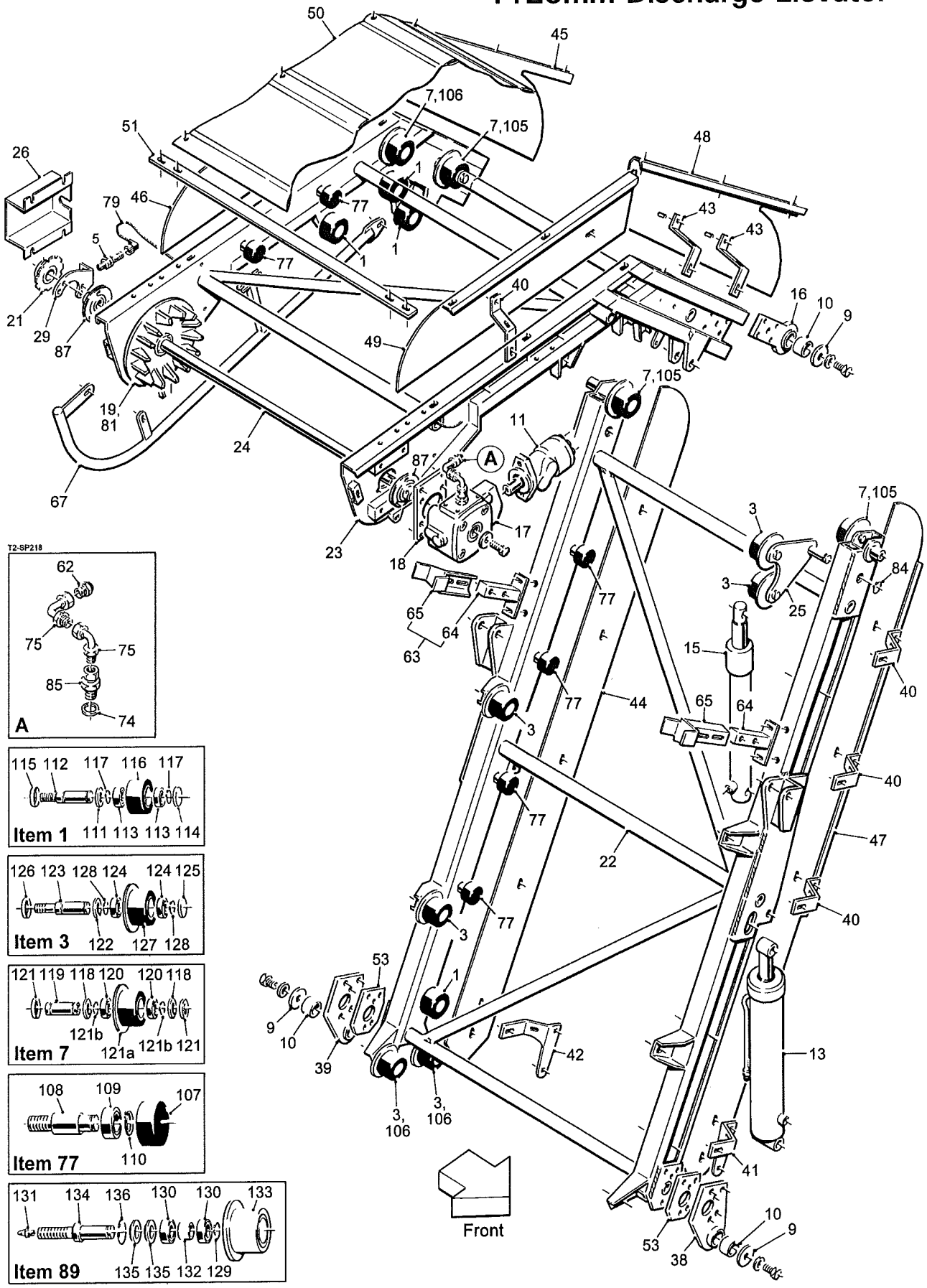

T2-SP218

Machines from 2016

1125mm Discharge Elevator

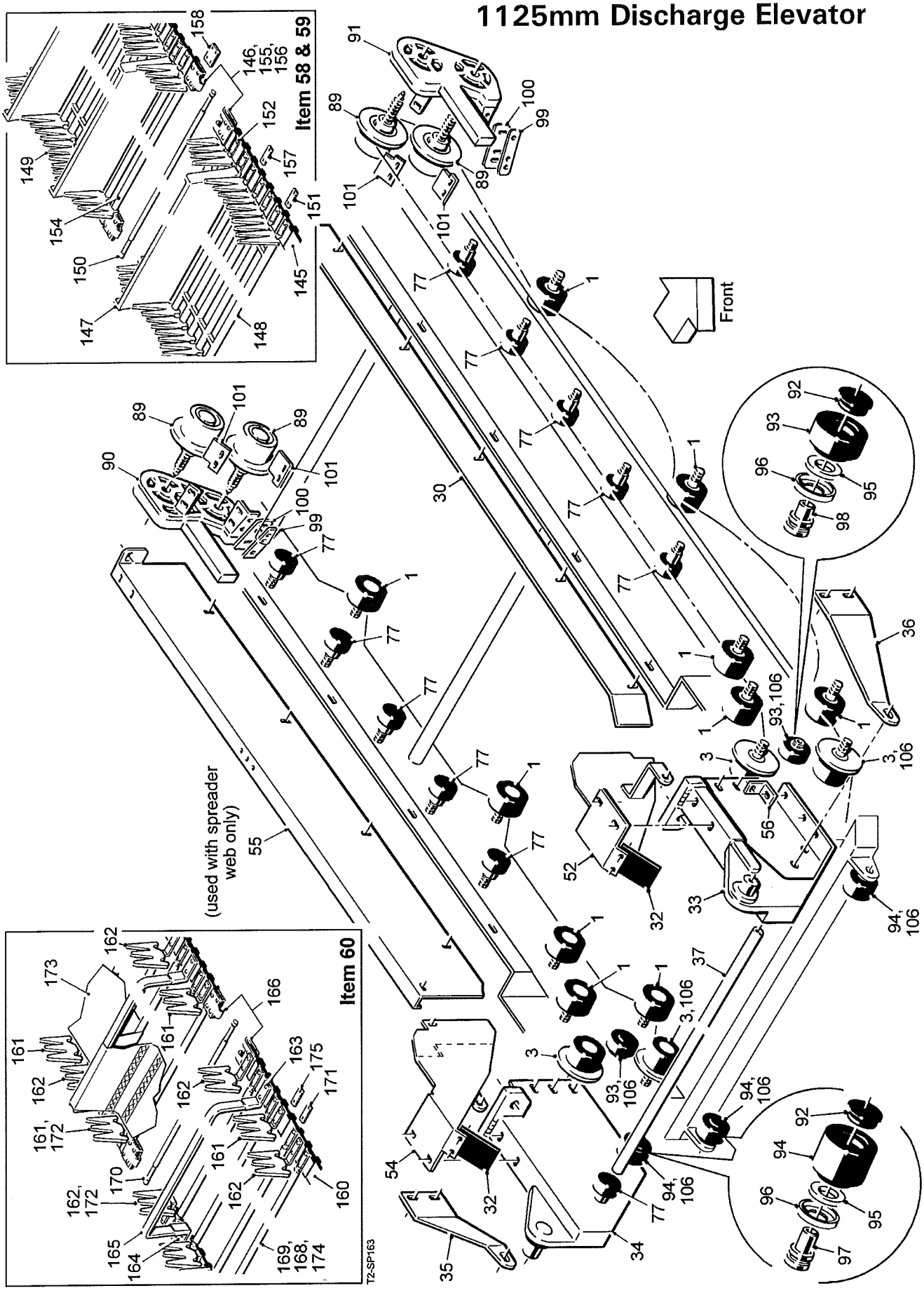

Machines from 2016

1125mm Discharge Elevator

Item	Part No.	Description	Qty.	Remarks
1	19356	Roller Assembly	18	(see list at end)
2				
3	12506	Roller Assembly	16	(see list at end)
4				
5	32037/1	Proximity Sensor	1	
6				
7	47083	Roller Assembly	6	(see list at end)
8				
9	46196	Pivot Retainer	4	
10	46379	Nylon Bush	4	
11	46855RP	Hydraulic Motor (rear port)	1	
12				
13	51044	Hydraulic Ram	2	
14				
15	56256	Hydraulic Ram	2	
16	56591	Top Pivot Plate	2	
17	56641	Gearbox Assembly	1	
18	56656	Reaction Plate	1	
19	56798	Drive Sprocket	2	For soft drop web
	56884	Drive Sprocket	2	For standard & salad crop webs
20				
21	59151	Sensor Disc	1	
22	59228	Elevator Centre Frame (1125mm)	1	
23	64179	Elevator Top Section (1125mm)	1	
24	59230	Drive Shaft	1	
25	59244A	Roller Bracket	2	
26	59313	Sensor Guard	1	
27				
28				
29	59364	Sensor Bracket	1	
30	59415	Front Deflector	1	
31				
32	59436	Rubber Flap	2	
33	59653	Elevator Front Mounting	1	
34	59654	Elevator Rear Mounting	1	
35	59655	Rear Brace	1	
36	59656	Front Brace	1	
37	59657	Ø40 Tie Bar	1	
38	59658	Bottom Pivot Plate	1	
39	59659	Bottom Pivot Plate	1	
40	59573	Panel Mounting Bracket (short)	12	
41	59573A	Front Panel Mounting Bracket	1	
42	59573B	Rear Panel Mounting Bracket	1	Not used with windrowkit
43	59574	Panel Mounting Bracket (long)	4	
44	59575	Rear Lower Side Panel	1	
45	59576	Rear Middle Side Panel	1	
46	59577	Rear Top Side Panel	1	Not used with windrowkit
47	59578	Front Lower Side Panel	1	
48	59579	Front Middle Side Panel	1	
49	59580	Front Top Side Panel	1	
50	59610	Elevator Cover (1125mm)	1	
51	59611	Cover Support	5	
52	59668	Front Elevator Web Side	1	
53	59766	10mm Spacer Plate	2	4mm use 59766/4

Machines from 2016

1125mm Discharge Elevator

Item	Part No.	Description	Qty.	Remarks
54	59669	Rear Elevator Web Side	1	Used with spreader web
	59671	Rear Elevator Web Side	1	Used with picking table
55	59672	Rear Deflector	1	Used with spreader web only
56	59933	Angle Bracket	2	
57				
58	59332	Standard Web Assy (1125mm)	1	Option (see list at end)
59	59332A	Salad Crop Web Assy (1125m)	1	Option (see list at end)
60	59027	Soft-Drop Web Assy (1125mm)	1	Option (see list at end)
61				
62	60370	1/4"BSP Breather	1	
63	62950	Elevator Support Complete	2	
64	62950A	Support Base	2	
65	62950B	Support Plate	2	
66				
67	64180	Guard Rail	2	
68				
69				
70				
71				
72				
73				
74	11124	1/2"BSP Dowty Seal	1	
75	12378	1/4"BSP M F Swept 90°Adaptor	2	
76				
77	0000301600	Roller Assembly	24	(see list at end)
78				
79	JK63720/5	Sensor Cable (15m)	1	
80				
81	HER09681A	Taperlock Bush	2	
82				
83				
84	PS843	Ø25 External Circlip	2	
85	W0730	1/2"BSPM x1/4"BSPF Swivel Adaptor	1	
86				
87	RAY35	Bearing	2	
88				
89	RPA510.309022	Roller Assembly	4	(see list at end)
90	RPA610.308647	Roller Mounting	1	
91	RPA610.308648	Roller Mounting	1	
92	RPC620.303070	Cap	8	
93	RPC700.300227	Ø75 Roller c/w Bearing	2	
94	RPC700.300148	Ø75 Roller c/w Bearings	2	
95	RPGM070.00446	Felt Seal	8	
96	RPGM089.00565	Roller Shield	6	
97	RPM180.303071	Roller Bush	4	
98	RPM180.300308	Roller Spindle	2	
99	RPM256.300133	Clamp Strip	2	
100	RPW240.300992	Perspex Scraper	2	
101	RPW240.310380	Scraper	4	
102				
103				
104				
105	SS030017/013	Steel Spacer	4	
106	SS030017/025	Steel Spacer	a/r	

Machines from 2016

1125mm Discharge Elevator

Item	Part No.	Description	Qty.	Remarks
	0000301600	**Roller Assembly Consists Of:**		
107	0000301601	Roller	1	
108	0000301602	Spindle	1	
109	6204RS	Bearing	1	
110	12298	Circlip	1	
	19356	**Roller Assembly Consists Of:**		
111	0000300504	Felt Seal	1	
112	11265	Spindle	1	
113	6005RS	Bearing	2	
114	PH407	Seal	1	
115	PH408	Seal	1	
116	PH77AR	Plain Roller	1	
117	PS843	Circlip	2	
	47083	**Roller Assembly Consists Of:**		
118	0000300504	Felt Seal	2	
119	47141	Roller Spindle	1	
120	6005RS	Bearing	2	
121	PH408	Seal	2	
121a	PH51AR	Flanged Roller	1	
121b	PS843	Circlip	2	
	12506	**Roller Assembly Consists Of:**		
122	0000300504	Felt Seal	1	
123	11265	Spindle	1	
124	6005RS	Bearing	2	
125	PH407	Seal	1	
126	PH408	Seal	1	
127	PH51AR	Flanged Roller	1	
128	PS843	Circlip	2	
	RPA510.309022	**Roller Assembly Consists Of:**		
129	12298	Circlip	1	
130	6204	Bearing	2	
131	RPC648.061000	M6 Straight Grease Nipple	1	
132	RPGM060.00416	Spacer	1	
133	RPM156.300677	Flanged Roller	1	
134	RPM180.309021	Spindle	1	
135	RPS210.002042	Metal Seal	2	
136	W0113	Circlip	1	

Machines from 2016

1125mm Discharge Elevator

Item	Part No.	Description	Qty.	Remarks
	59332	**Standard Web Assembly Consists Of:**		
145	59332/1	Web Belt	2	
146	56825/2	Joiner Set	2	
147	59332/2	Flight Moulding	66	
148	59332/3A	5 Web Bar Section	66	
149	56825/5	Side Finger Moulding	132	
150	59332/6	Joining Rod	1	
151	46847/4	Backing Plate (for web bars)	792	
152	RPF240.160250	Ø6x25 Rivet	1584	
153				
154	59332/3	Bar Moulding	4	
155	22012006/035	M6x35 Hex Head Bolt	8	
156	22012008/035	M8x35 Hex Head Bolt	8	
157	56825/9	Backing Plate (for flights)	132	
158	56825/10	Backing Plate (4 hole tapped)	4	
159				
	59332A	**Salad Crop Web Assy Consists Of:**		
145	59332/1	Outer Web Belt	2	
146	56825/2	Joiner Set	3	
147	59332/2	Flight Moulding	65	
148	59332A/3	Ø30 Web Bar Moulding	326	
149	56825/5	Side Finger Moulding	130	
150	59332/6	Joining Rod	1	
151	-	Backing Plate	a/r	
152	-	Rivet	a/r	
153	59332A/1	Centre Web Belt	1	(not shown)
	59027	**Soft-Drop Web Assembly Consists Of:**		
160	59027/1	Web Belt	2	
161	59111	Side Finger (outer)	128	
162	59111L	Side Finger (inner)	128	
163	RPS83/5	LH Flight Socket	64	
164	RPS83/6	RH Flight Socket	64	
165	-	Web Flight	64	
166	RPS83/9	Joiner Set	2 pairs	
167	RPS83/13	Drop-away Link	2	(not shown)
168	-	Ø16 PVC Sleeve	197	
169	-	Steel Web Rod	197	
170	RPS83/18	Joining Rod	1	
171	44237/14	Backing Plate (M6 tapped holes)	256	
172	22016006/013	M6x13 CSK Screw	1056	
173	-	Sheet	1	
174	-	Rivet	788	
175	-	Backing Plate (plain holes)	394	

Machines from 2016

Tractor Powered Hydraulics

Assy No 59030

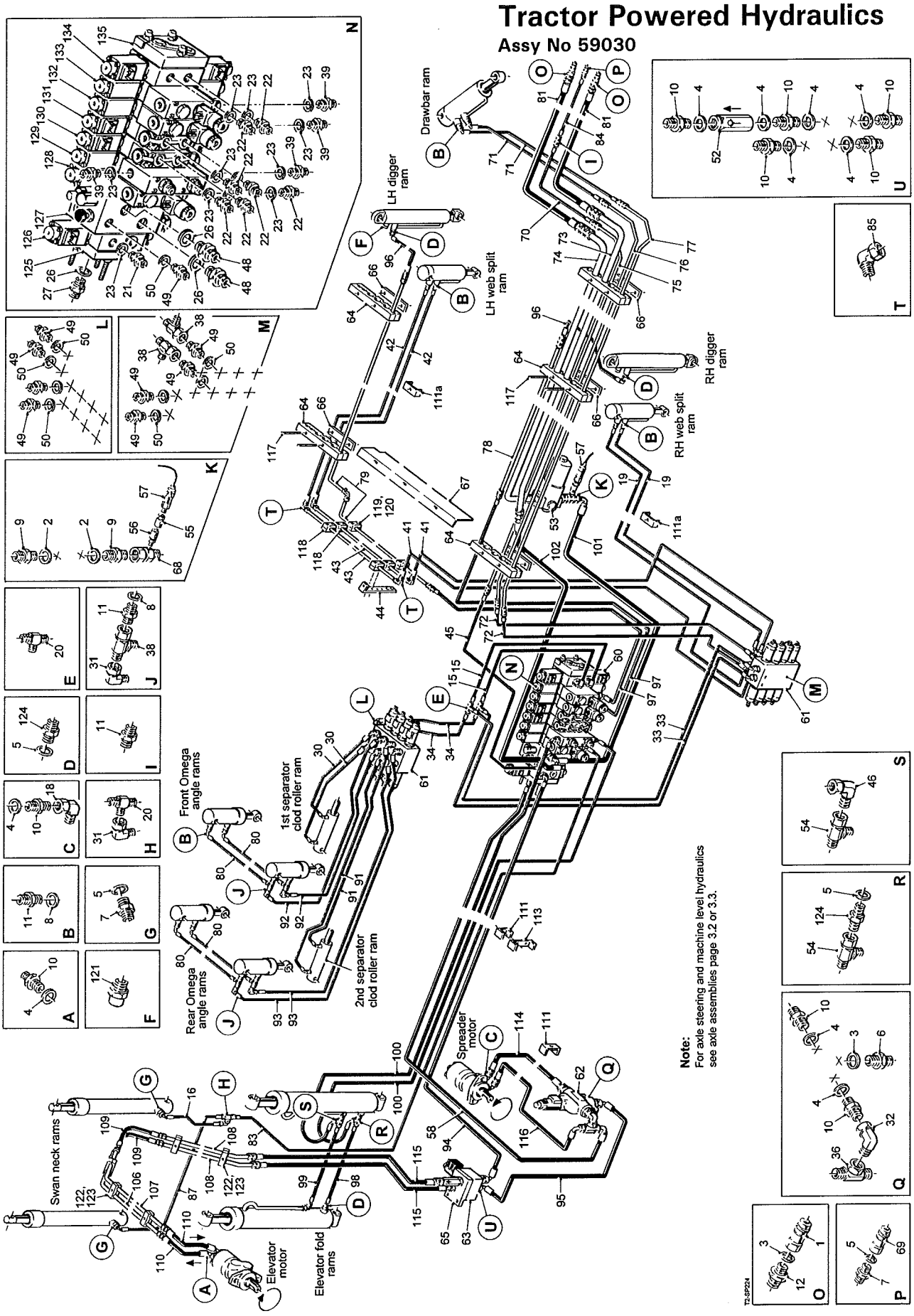

Machines from 2016

Tractor Powered Hydraulics

Assy No 59030

Item	Part No.	Description	Qty.	Remarks
1	11108A	3/4"BSP Probe	2	
2	11122	1"BSP Dowty Seal	2	
3	11123	3/4"BSP Dowty Seal	5	
4	11124	1/2"BSP Dowty Seal	11	
5	11125	3/8"BSP Dowty Seal	7	
6	11295	1/2"BSPx3/4"BSP M M Adaptor	1	
7	11336	1/4"BSPx3/8"BSP M M Adaptor	5	
8	11337	1/4"BSP Dowty Seal	16	
9	11114	1"BSP M M Adaptor	2	
10	12315	1/2"BSP M M Adaptor	13	
11	12316	1/4"BSP M M Adaptor	17	
12	12560	3/4"BSPx1"BSP M M Adaptor	2	
13				
14				
15	13187	1/4"Hose Assembly (700mm)	2	
16	13188	1/4"Hose Assembly (1000mm)	1	
17				
18	12351	1/2"BSP MF Compact 90°Adaptor	2	
19	27447	1/4"Hose Assembly (2000mm)	2	
20	27449	1/4"BSP M M M Tee	6	
21	27459	M18x1/2"BSP M M Adaptor	1	
22	27460	M18x1/4"BSP M M Adaptor	7	
23	27461	M18 Dowty Seal	12	
24				
25				
26	31167	M22 Dowty Seal	3	
27	31168	M22x1/2"BSP M M Adaptor	1	
28				
29				
30	32291	1/4"Hose Assembly (1600mm)	2	
31	32474	1/4"BSP MF Compact 90°Adaptor	6	
32	32475	1/2"BSP MF Compact 90°Adaptor	1	
33	32577	1/4"Hose Assembly (1250mm)	2	
34	32890	1/4"Hose Assembly (1500mm)	2	
35				
36	37172	1/2"BSP M M F Tee	1	
37				
38	37197	1/4"BSP F M M Tee	6	
39	37599	M18x 3/8"BSP M M Adaptor	4	
40				
41	62747	1/4"Hose Assembly (1700mm)	2	
42	62748	1/4"Hose Assembly (3100mm)	2	
43	62749	Ø10 Steel Pipe Assembly	2	
44	62750	Pipe Clamp Support Plate	3	
45	42337	1/4"Hose Assembly (450mm)	1	
46	42343	3/8"BSP MF Compact 90°Adaptor	1	
47				
48	44204	M22x1"BSP M M Adaptor	2	
49	44207	M14x1/4"BSP M M Adaptor	21	
50	44208	M14 Dowty Seal	21	
51				
52	46807	1/2"BSP In-line Check Valve	1	
53	62979	Pressure Filter Complete	1	Element only 37770/1
54	46939	3/8"BSP F M M Tee	2	
55	46960	Pressure Gauge Adaptor	1	

Machines from 2016

Tractor Powered Hydraulics

Assy No 59030

Item	Part No.	Description	Qty.	Remarks
56	42305	1/8"BSP Gauge Port	1	
57	51270	Pressure Transmitter	1	
58	51549	1/2"Hose Assembly (4100mm)	1	
59				
60	59103	Valve Bank Assembly	1	(see list at end)
61	59104	Slave Valve	2	
62	59204	Flow Control Valve	1	
63	59215	Motor Valve c/w O'ring	1	
64	62967	Pipe Clamp (10-10-30-30-30-12)	10pair	
65	59280	Valve Base	1	
66	62971	Nylon Clamp Strip	10	
67	62963	Pipe Shield	1	
68	60161	1"BSP M F Gauge Port	1	
69	60166	3/8"BSP Probe	1	
70	60187	1/4"Hose Assembly (900mm)	1	
71	60197	1/4"Hose Assembly (1600mm)	2	
72	60318	1/4"Hose Assembly (1800mm)	2	
73	60662	Ø30 Steel Pipe Assembly	1	
74	60663	Ø30 Steel Pipe Assembly	1	
75	60379	Ø10 Steel Pipe Assembly	1	
76	60388	Ø10 Steel Pipe Assembly	1	
77	60389	Ø10 Steel Pipe Assembly	1	
78	60390	Ø12 Steel Pipe Assembly	1	
79	60391	Ø12 Steel Pipe Assembly	1	
80	23320	1/4"Hose Assembly (2200mm)	4	
81	60671	1"Hose Assembly (3000mm)	2	
82				
83	60405	1/4"Hose Assembly (6300mm)	1	
84	60408	1/4"Hose Assembly (2100mm)	1	
85	60633	L10 MF Elbow	4	
86				
87	60412	1/4"Hose Assembly (2340mm)	1	
88				
89				
90				
91	60418	1/4"Hose Assembly (2400mm)	2	
92	60419	1/4"Hose Assembly (1800mm)	2	
93	60420	1/4"Hose Assembly (2600mm)	2	
94	60426	1/2"Hose Assembly (4100mm)	1	
95	60438	1/2"Hose Assembly (600mm)	1	
96	60439	3/8"Hose Assembly (1050mm)	2	
97	60440	3/8"Hose Assembly (1200mm)	2	
98	60441	3/8"Hose Assembly (1035mm)	1	
99	60442	3/8"Hose Assembly (1045mm)	1	
100	60658	3/8"Hose Assembly (4800mm)	2	
101	60445	1"Hose Assembly (1350mm)	1	
102	60682	1"Hose Assembly (1000mm)	1	
103				
104				
105				
106	60522	Ø15 Steel Pipe Assembly	1	
107	60523	Ø15 Steel Pipe Assembly	1	
108	60524	Ø15 Steel Pipe Assembly	2	
109	60535	1/2"Hose Assembly (1300mm)	2	

Machines from 2016

Tractor Powered Hydraulics

Assy No 59030

Item	Part No.	Description	Qty.	Remarks
110	60373	1/2"Hose Assembly (450mm)	2	
111	59295	Hose Clamp (2 pipe)	7	
111a	62401	Hose Clamp (2 pipe)	6	
112				
113	59297	Hose Clamp (3 + 2 pipe)	3	
114	60695	1/2"Hose Assembly (2400mm)	1	Not used on inline or easi-pic
115	60537	1/2"Hose Assembly (2350mm)	2	
116	42521	1/2"Hose Assembly (2500mm)	1	Not used on inline or easi-pic
117	22106008/065	M8x65 Clamp Stud	20	
118	RPS466	Ø10 Pipe Clamp Complete	6	
119	RPC654.309025	Pipe Clamp Top Plate	5	
120	RPC654.309026	Pipe Clamp	5	
121	RPP500.202000	1/8"BSP Breather	2	
122	RPC654.308052	Pipe Clamp Top Plate	5	
123	RPC654.309125	Clamp Plate	5	
124	UC31A	3/8"BSP M M Adaptor	4	
	59103	**Valve Bank Assembly Consists Of:**		
125	46285/6	End Plate	1	
126	51027/1	'Elevator Motor' Section Complete	1	
	RPGM230581	Solenoid Only	2	
127	46285/4	Inlet Section Complete	1	
128	51028/1	'Swan Neck' Section Complete	1	
	RPGM230581	Solenoid Only	2	
	51028/4B	Check Solenoid Only	1	
129	51028/3	'Elevator Fold' Section Complete	1	
	RPGM228383	Solenoid Only	2	
130	46285/1	'LH Axle Steer' Section Complete	1	
	RPGM228383	Solenoid Only	2	
131	46285/1	'RH Axle Steer' Section Complete	1	
	RPGM228383	Solenoid Only	2	
132	51028/1	'LH Digger' Section Complete	1	
	RPGM228383	Solenoid Only	2	
	51028/4B	Check Solenoid Only	1	
133	51028/1	'RH Digger' Section Complete	1	
	RPGM228383	Solenoid Only	2	
	51028/4B	Check Solenoid Only	1	
134	46285/10	'Slave Valve' Section Complete	1	
135	46285/7	End Plate	1	

Machines from 2016

Powered Axle Hydraulics

Assy No 59031

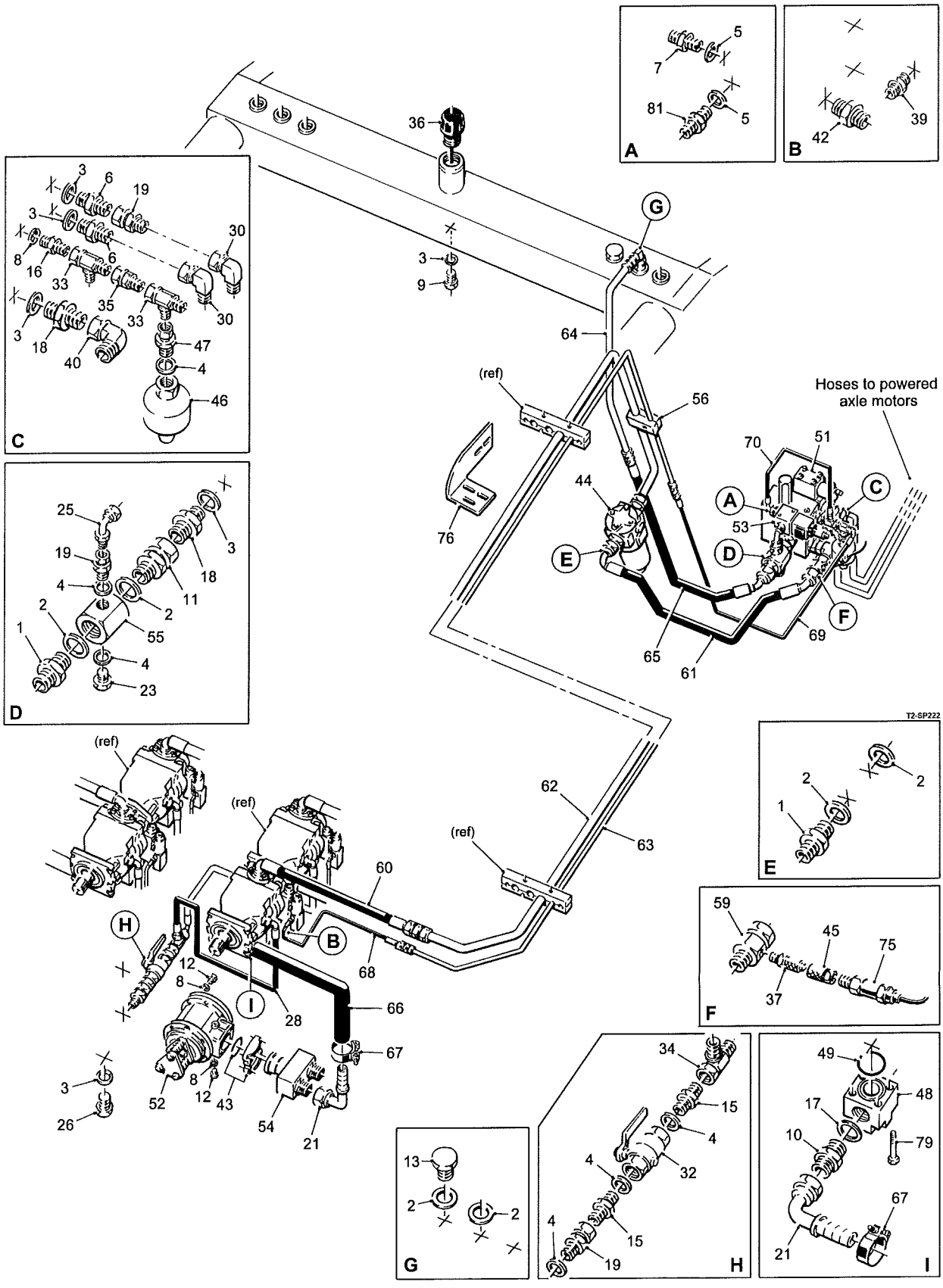

Machines from 2016

Powered Axle Hydraulics

Assy No 59031

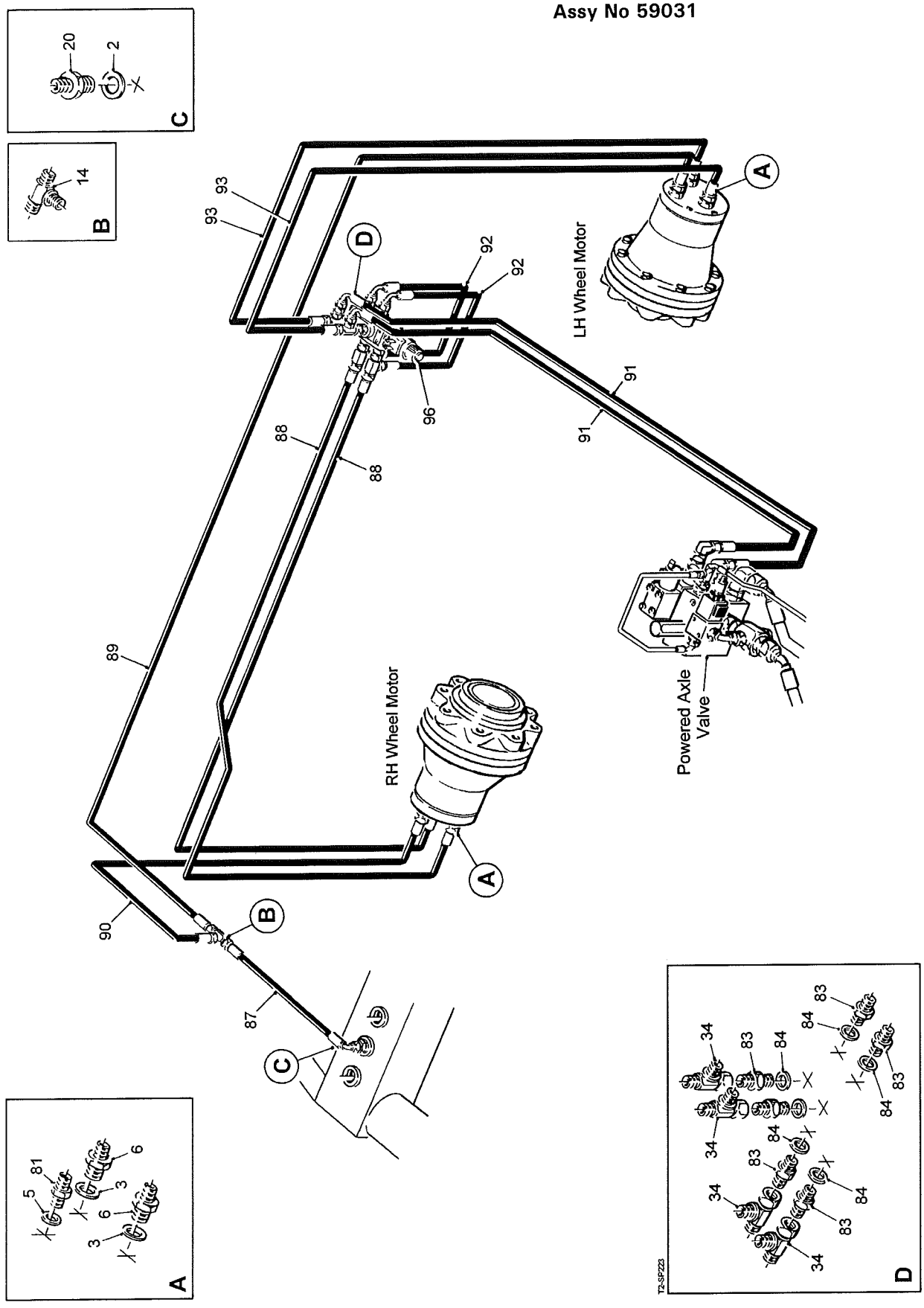

Machines from 2016

Powered Axle Hydraulics

Assy No 59031

Item	Part No.	Description	Qty.	Remarks
1	11114	1"BSP M M Adaptor	2	
2	11122	1"BSP Dowty Seal	7	
3	11123	3/4"BSP Dowty Seal	10	
4	11124	1/2"BSP Dowty Seal	6	
5	11125	3/8"BSP Dowty Seal	4	
6	11295	1/2"BSPx3/4"BSP M M Adaptor	4	
7	11336	1/4"BSPx3/8"BSP M M Adaptor	1	
8	11337	1/4"BSP Dowty Seal	3	
9	11717	3/4"BSP Blanking Plug	1	
10	11737	1 1/4"BSPx1 1/2"BSP M M Adaptor	1	
11	11808	1"BSP M F Swivel Adaptor	1	
12	11876/8	1/4"BSP Blanking Plug	2	
13	11116	1"BSP Blanking Plug	1	
14	12323	1/2"BSP M M M Tee	1	
15	12315	1/2"BSP M M Adaptor	2	
16	12316	1/4"BSP M M Adaptor	1	
17	12352	1 1/2"BSP Dowty Seal	1	
18	12560	3/4"BSPx1"BSP M M Adaptor	2	
19	12602	1/2"BSP M F Swivel Adaptor	3	
20	12521	1/2"BSPx1"BSP M M Adaptor	1	
21	13299	1 1/4"BSP 90°Push On Adaptor	2	
22				
23	24383	1/2"BSP Blanking Plug	1	
24				
25	26086	1/2"BSP M F Swept 90°Adaptor	1	
26	11117	3/4"BSP Blanking Plug	1	
27				
28	60359	1/2"Hose Assembly (700mm)	1	
29				
30	32475	1/2"BSP MF Compact 90°Adaptor	2	
31				
32	37019	1/2"BSP Shut-off Valve	1	
33	37197	1/4"BSP F M M Tee	2	
34	37367	1/2"BSP M F M Tee	5	
35	46724	1/4"BSP M F Swivel Adaptor	1	
36	42066	Filler Cap c/w Dipstick	1	
37	42305	1/8"BSP Gauge Port	1	
38				
39	44198	1/4"BSPx7/16"UNF M M Adaptor	1	
40	44179	1"BSP M F Compact 90°Adaptor	1	
41				
42	46303	1/2"BSPx7/8"UNF M M Adaptor	1	
43	46503	2 1/2" Split Flange Kit c/w O' Ring	1	
44	62979	Pressure Filter Complete	1	Element only 37770/1
45	46960	Pressure Gauge Adaptor	1	
46	51585	1/2"BSP Accumulator	1	
47	51588	1/4"BSPFx1/2"BSPM Swivel Adaptor	1	
48	56302	Pump Adaptor	1	
49	56637	2"Flange O' Ring	1	
50				
51	59107	Valve Block Assembly	1	
52	59178	Suction Filter Complete	1	
53	59205	Proportional Pressure Valve	1	
54	59262	Suction Manifold	1	
55	59289	Return Manifold	1	

Machines from 2016

Powered Axle Hydraulics

Assy No 59031

Item	Part No.	Description	Qty.	Remarks
56	62970	Pipe Clamp (10-30)	2 pairs	
57				
58				
59	60161	1"BSP M F Gauge Port	1	
60	60673	1" 5K Hose Assembly (1100mm)	1	
61	60626	1" 5K Hose Assembly (1425mm)	1	
62	60664	Ø30 Steel Pipe Assembly	1	
63	60383	Ø10 Steel Pipe Assembly	1	
64	60396	Ø25 Steel Pipe Assembly	1	
65	60452	1"Hose Assembly (500mm)	1	
66	60453	1 1/4"Suction Hose (430mm)	1	
67	60532	Ø40-43mm Hose Band	2	
68	60630	1/4" 5K Hose Assembly (900mm)	1	
69	60631	1/4" 5K Hose Assembly (650mm)	1	
70	60632	1/4" 5K Hose Assembly (300mm)	1	
71				
72				
73				
74				
75	62774	Pressure Transmitter (400 Bar)	1	
76	62567A	LH Filter Mounting	1	
77				
78				
79	22028050/325	1/2"UNCx3 1/4"Bolt	4	
80				
81	UC25	3/8"BSPx1/2"BSP M M Adaptor	3	
82				
83	27459	M18x1/2"BSP M M Adaptor	6	
84	27461	M18 Dowty Seal	6	
85				
86				
87	60293	1/2"Hose Assembly (1900mm)	1	
88	60601	1/2"5K Hose Assembly (4700mm)	2	
89	60751	1/2"3K Hose Assembly (5500mm)	1	
90	60752	1/2"3K Hose Assembly (3400mm)	1	
91	60635	1/2"5K Hose Assembly (4700mm)	2	
92	60641	1/2"5K Hose Assembly (600mm)	2	
93	60642	1/2"5K Hose Assembly (3100mm)	2	
94				
95				
96	62336	Hydraulic Valve	1	

Machines from Serial No T2-168

Electrical Assembly

Assy No 59029

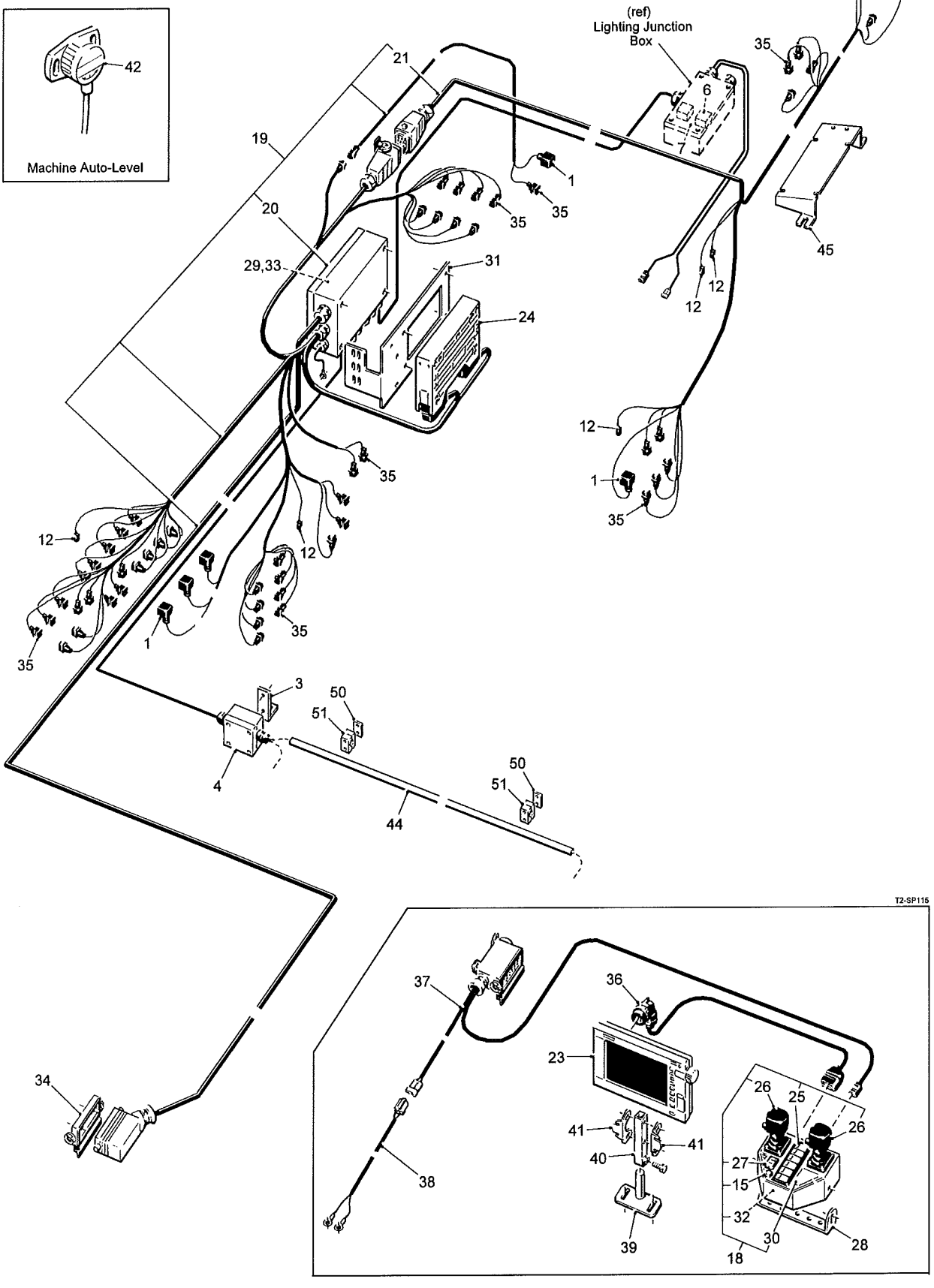

Machines from Serial No T2-168

Electrical Assembly

Assy No 59029

Item	Part No.	Description	Qty.	Remarks
1	27189	Hirschman Plug	a/r	
2				
3	46940	Junction Box Mounting Bracket	1	
4	46892	Junction Box	1	
5				
6	51240	Oil Cooler Relay	1	
7	51247	25 Amp Fuse	2	
8				
9				
10				
11				
12	54220	2 Way Female Connector	5	
13				
14				
15	57243	Green Push Button Switch	1	
16				
17				
18	59046	Slave Box Complete	1	
19	59047	Machine Loom Complete	1	
20	59047/1	Distribution Box and Loom	1	
21	59047/2	LH Loom	1	
22				
23	59231	Touch-Screen Monitor	1	
24	59232	C/ESX-3XL-A Controller	1	
25	59239	Rocker Switch Bank Assembly	1	
26	59240	Joystick	2	
27	59241	Rocker Switch	1	
28	59248	Stirrup	1	
29	59253	Distribution Board	1	
30	59254	Decal	1	
31	59271	Module Mounting Plate	1	
32	59368	Slave Board	1	
33	59371	Box	1	
34	59375	Plug Cover	1	
35	59402	2 Way Terminal Plug	a/r	
36	59403	Display Loom	1	
37	59404	Cab Loom	1	
38	59405	Power Lead	1	
39	59432	Screen Base	1	
40	59433	Screen Stem	1	
41	59434	Screen Bracket	2	
42	59455	Auto-level Tilt Sensor	1	Optional
43				
44	62892	Cable Tube (1300mm)	1	Rubber depth rollers
	62892A	Cable Tube (660mm)	1	Ultrasonic depth control
45	62982	Enclosure Mounting Plate	1	
46				
47				
48				
49				
50	RPC654.309025	Clamp Plate	2	
51	RPC654.309026	Hose Clamp	2	

Machines from 2016

Road Lights Assembly

Assy No 59036

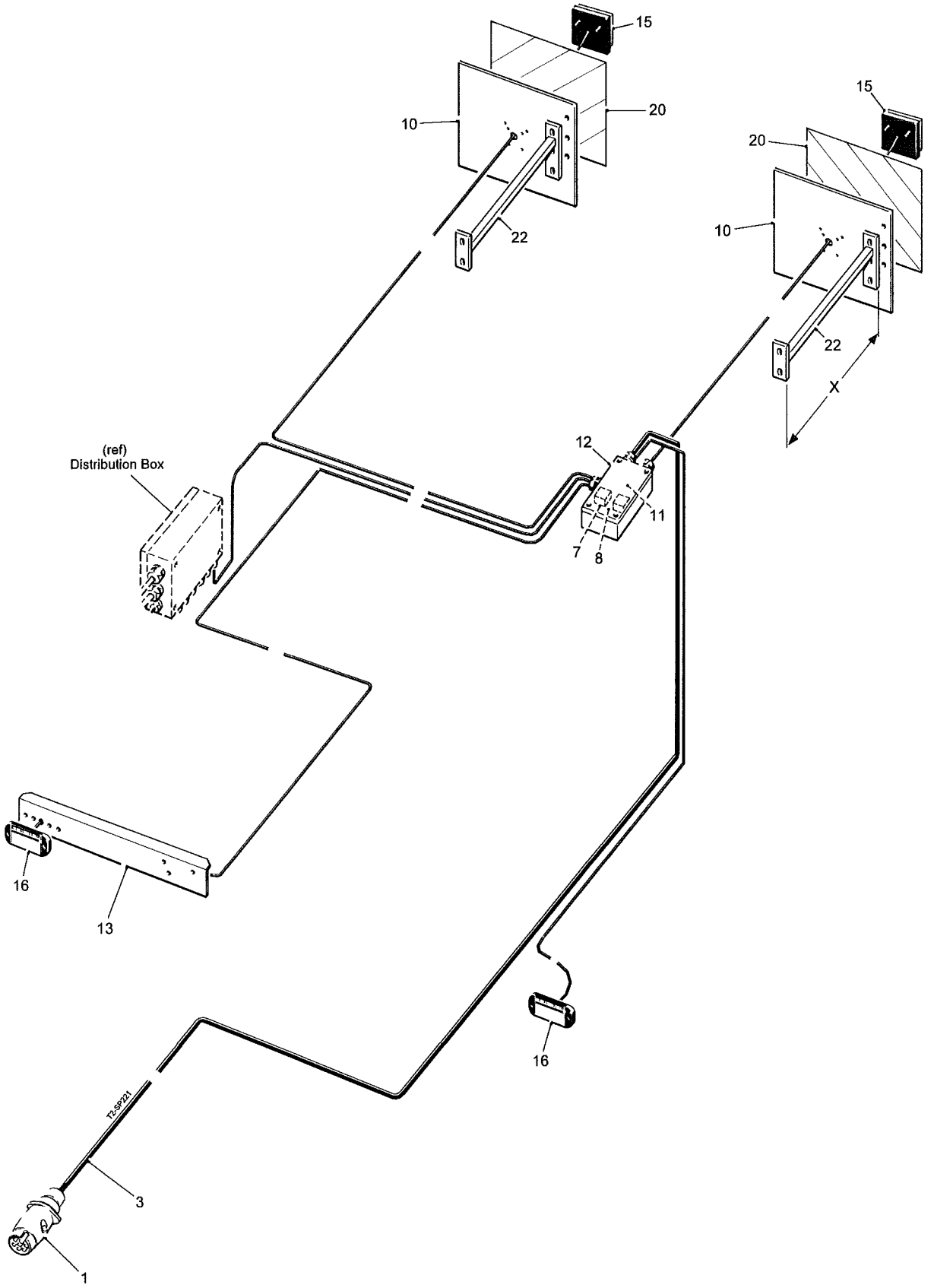

Machines from 2016

Road Lights Assembly

Assy No 59036

Item	Part No.	Description	Qty.	Remarks
1	10134	7 Pin Plug	1	
2				
3	11369	7 Core Cable	10.5m	
4				
5				
6				
7	51240	Working Lights Relay	1	
8	51247	25 Amp Fuse	2	
9				
10	59285	Rear Light Bracket	2	
11	59369	Lighting Board	1	
12	59435	Box only	1	
13	59722	Light Mounting plate	1	
14				
15	62217A	LED Rear Light Assembly	2	
16	62470	LED Front Light Assembly	2	
17				
18				
19				
20	TR496	Red/White Stripe Reflector Decal	2	
21				
22	59597	Light Extension Bracket (X = 685mm)	2	Used with rear platform
	59597A	Light Extension Bracket (X = 769mm)	2	Used with Omega Pro-clean

Machines from Serial No T2-168

Rear Inspection Platform

Assy No 59062

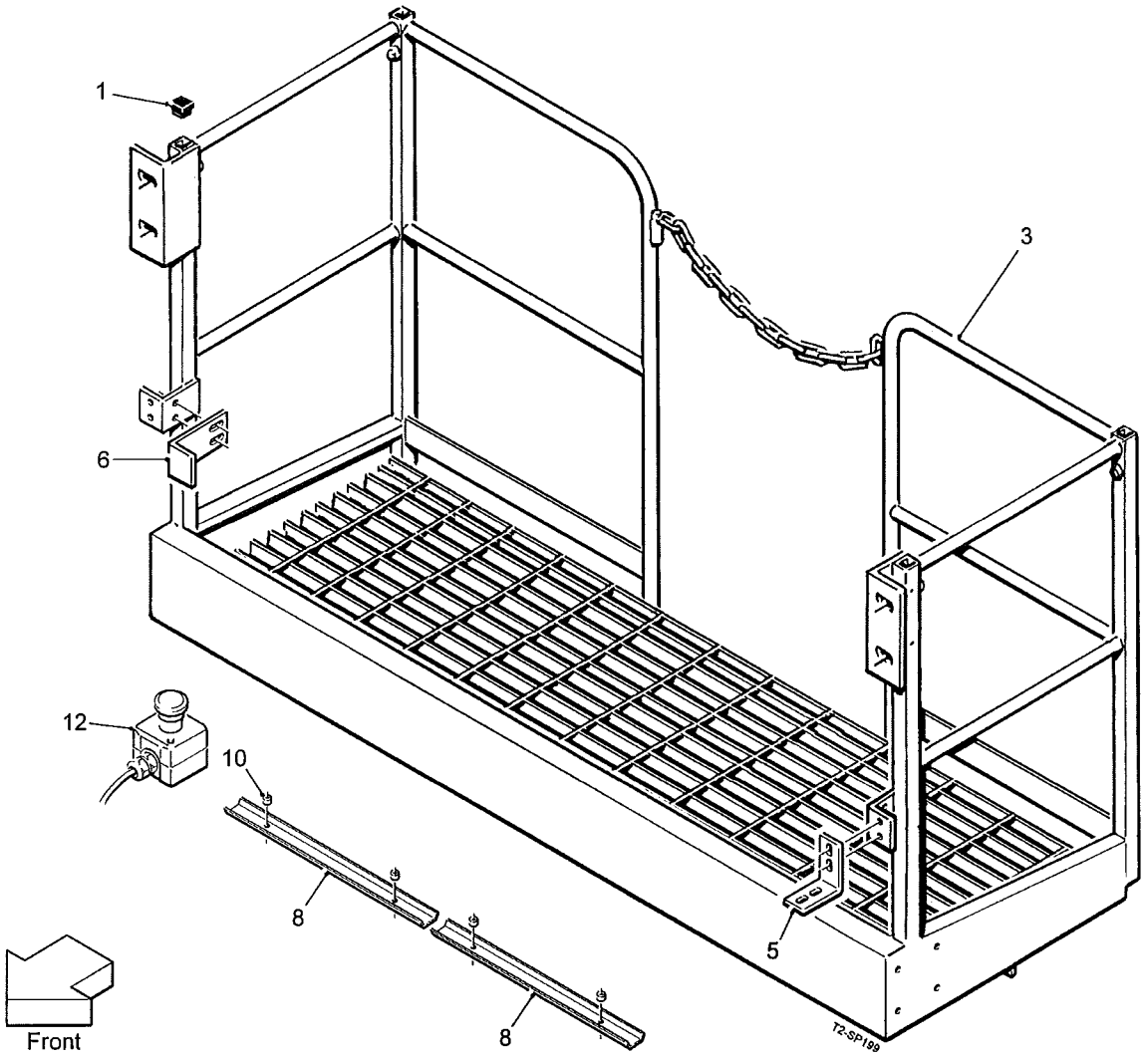

Machines from Serial No T2-168

Rear Inspection Platform

Assy No 59062

Item	Part No.	Description	Qty.	Remarks
1	37753	30x30 Plastic Insert	4	
2				
3	59407	Inspection Platform	1	
4				
5	62889	LH Support Bracket	1	
6	62890	RH Support Bracket	1	
7				
8	64008	Cable Support Plate	2	
9				
10	SS012006/010	Steel Spacer	4	
11				
12	44740	Emergency Stop Switch	1	

Machines from 2016

In-line Picking Table

Assy No 59058

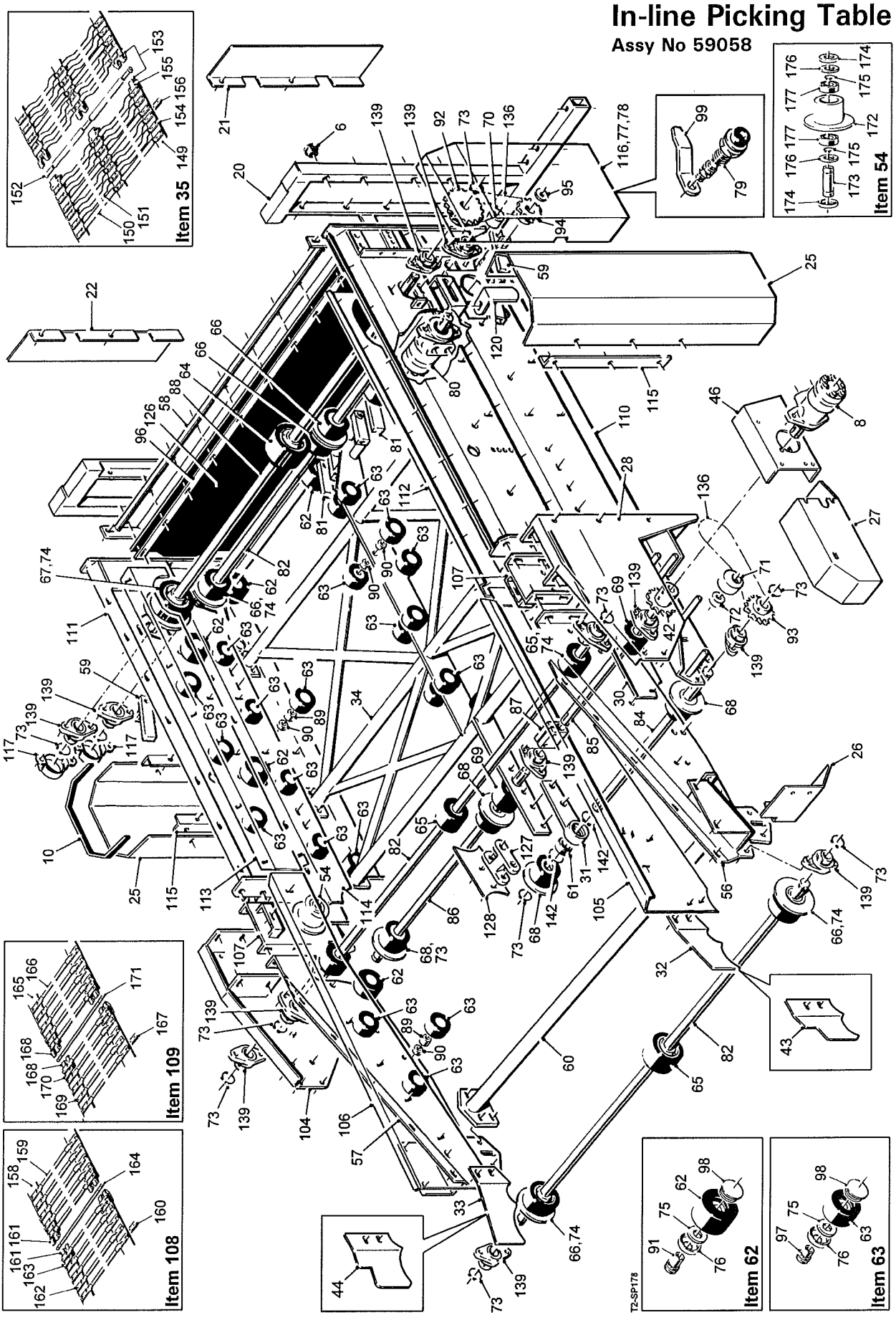

Machines from 2016

In-line Picking Table

Assy No 59058

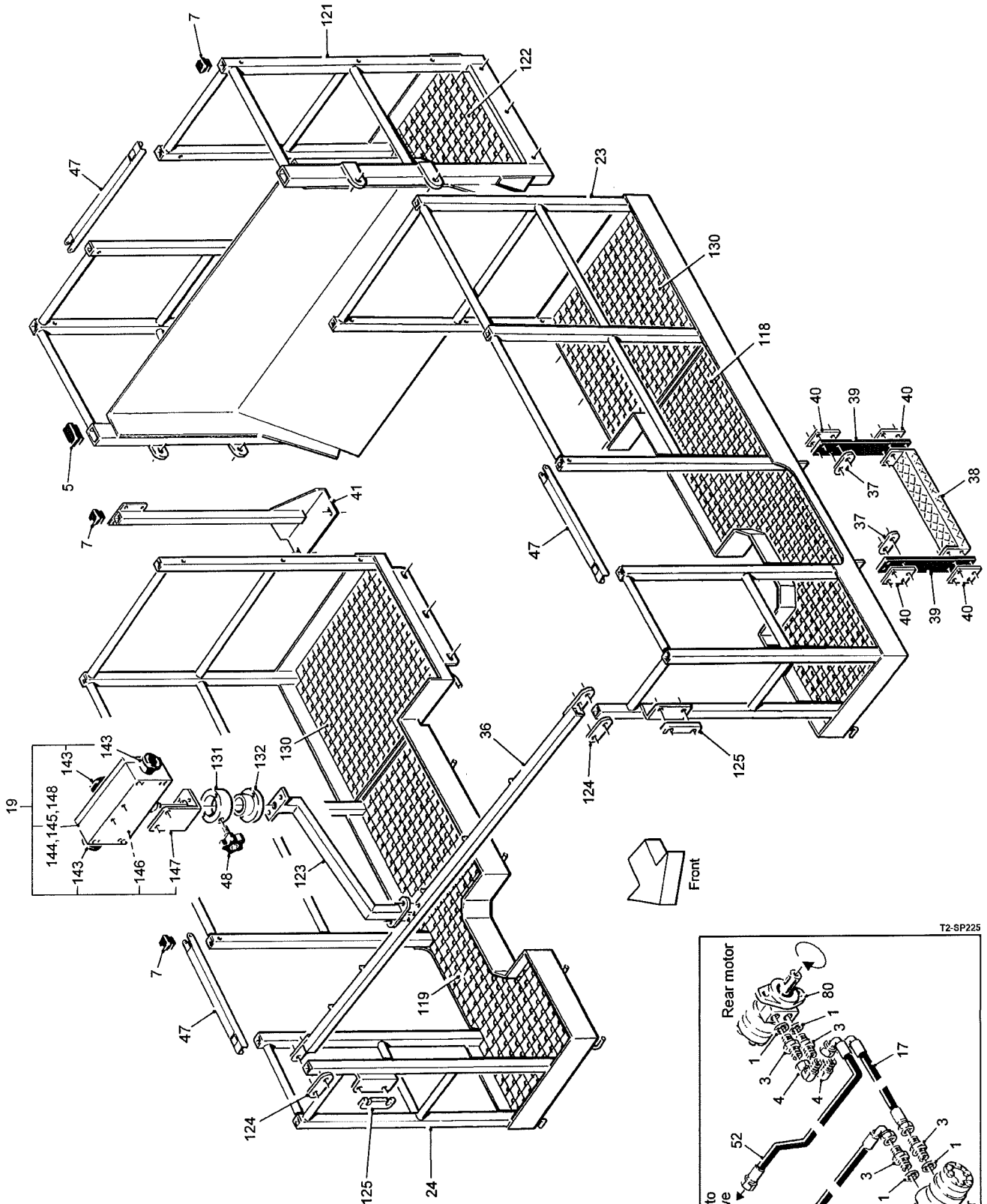

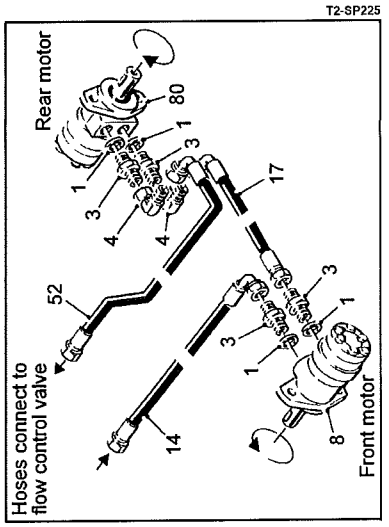

Machines from 2016

In-line Picking Table

Assy No 59058

Item	Part No.	Description	Qty.	Remarks
1	11124	1/2"BSP Dowty Seal	4	
2				
3	12315	1/2"BSP M M Adaptor	4	
4	32475	1/2"BSP M F Compact 90°Elbow	2	
5	32669	60x40 Plastic Insert	2	
6	37391	Plastic Insert	8	
7	37753	30x30 Plastic Insert	20	Qty x16 with canopy
8	37897	Hydraulic Motor	1	
9				
10	43227	Edging Strip	a/r	
11				
12				
13				
14	60683	1/2"Hose Assembly (3100mm)	1	
15				
16				
17	51553	1/2"Hose Assembly (2300mm)	1	
18				
19	59078	Control Box Assembly	1	(see list at end)
20	59409	Platform Support Frame	1	
21	59410	LH Rear Infill Panel	1	
22	59411	RH Rear Infill Panel	1	
23	64191	LH Platform	1	
24	64192	RH Platform	1	
25	59414	Side Chute	2	
26	59286	Cross Web Guard LH	1	Used on build 62762A
27	59416A	Guard	1	
28	59648A	LH Mounting Panel	1	
29				
30	59420	LH Lower Side Panel	1	
31	59421	Bearing Housing	1	
32	59422	LH Deflector	1	Transfer with clod roller use 59422A
33	59423	RH Deflector	1	Transfer with clod roller use 59423A
34	59650	Cross Brace	1	
35	59449	Picking Web Assembly	1	(see list at end)
36	59468	Support Bar	1	
37	59469	Clamp Plate	6	
38	59470	Step	3	
39	59471	Strap	6	
40	59485	Support Plate	12	
41	59728	Light Mounting bracket	2	
42	59739	15T 3/4"Pitch Sprocket	1	
43	59779	LH Deflector	1	Used with omega single transfer roller
44	59780	RH Deflector	1	Used with omega single transfer roller
45				
46	62895	Motor Mounting	1	
47	62976	Safety Rail	3	
48	62251	Knob	1	
49				
50				
51				
52	60484	1/2"Hose Assembly (5600mm)	1	
53				
54	KA16021	Ø80 Flanged Roller Assembly	2	(see list at end)
55				

Machines from 2016

In-line Picking Table

Assy No 59058

Item	Part No.	Description	Qty.	Remarks
56	RPA610.303525	LH Mounting Panel	1	
57	RPA610.303526	RH Mounting Panel	1	
58	RPA610.303586A	Rear Chute	1	
59	RPA610.303818	Adjuster Arm	2	
60	RPA610.305863	Support Bar	1	
61	RPB208.022062	Bearing	1	
62	RPC700.300147	Ø95 Plain Roller c/w Bearings	10	
63	RPC700.300227	Ø75 Plain Roller c/w Bearings	36	
64	RPC700.301543	Ø132 Plain Drive Roller (Ø35 bore)	1	
65	RPC700.302662	Ø100 Plain Roller (Ø35 bore)	4	
66	RPC700.302663	Ø100 Flanged Roller (Ø35 bore)	6	
67	RPC700.303613	Ø132 Flanged Drive Roller (Ø35 bore)	2	
68	RPC700.303618	Ø100 Flanged Roller (Ø30 bore)	4	
69	RPC700.303619	Ø100 Plain Roller (Ø30 bore)	2	
70	RPC700.304412	Nylon Chain Tensioner	1	
71	RPC700.307700	Nylon Chain Tensioner	1	
72	RPC700.307993	Tensioner Spacer	1	
73	RPF200.030200	Ø30 External Circlip	13	
74	RPF200.035250	Ø35 External Circlip	8	
75	RPGM070.00446	Felt Seal Ring	46	
76	RPGM089.00565	Roller Shield	46	
77	RPGMRPB99.03510	Hinge	1	
78	RPGMRPB99.03511	Hinge	1	
79	57199	Lock Assembly	1	
80	RPH850.302359	Hydraulic Motor	1	
81	RPM102.302146	Roller Arm	2	
82	RPM162.302073	Ø35 Shaft	3	
83				
84	RPM162.303608	Ø30 Shaft	1	
85	59652	Ø30 Shaft	1	
86	RPM162.303610	Ø30 Shaft	1	
87	RPM162.303612	Coupling	1	
88	RPM162.303630	Ø35 Shaft	1	
89	RPM176.306318	20mm Spacer	32	
90	RPM176.306319	10mm Spacer	46	
91	RPM180.303071	Roller Spindle	10	
92	RPM182.300347	24T 3/4"Pitch Sprocket	1	
93	RPM182.300348	15T 3/4"Pitch Sprocket	1	
94	RPM182.300350	12T 3/4"Pitch Sprocket	1	
95	RPM196.300869	Washer	1	
96	RPM256.302154	Clamp Strip	1	
97	RPM180.300308	Roller Spindle	36	
98	RPC620.303070	Cap	46	
99	57219		1	
100				
101				
102				
103				
104	59649	RH Mounting Panel	1	
105	RPS113	LH Upper Side Panel	1	
106	RPS114	RH Upper Side Panel	1	
107	RPS122	Infill Panel	2	
108	RPS561	Transfer Web (long)	1	(see list at end)
109	59661	Transfer Web (short)	1	(see list at end)
110	RPS571	LH Mounting Panel	1	

Machines from 2016

In-line Picking Table

Assy No 59058

Item	Part No.	Description	Qty.	Remarks
111	RPS572	RH Mounting Panel	1	
112	RPS573	LH Side Panel	1	
113	RPS574	RH Side Panel	1	
114	62755	RH Lower Side Panel	1	
115	RPS601	Mounting Angle	4	
116	RPS602	Drive Guard	1	
117	RPS603	Bearing Guard	2	
118	RPS608	LH Platform Base	1	
119	RPS609	RH Platform Base	1	
120	RPS704	Guard Latch Plate	1	
121	64193	Rear Platform	1	
122	RPS708	Rear Platform Base	1	
123	RPS710	Control Box Arm	1	
124	RPS712	Clamp Plate	2	
125	RPS717	Spacer Plate	2	
126	RPS828	Rubber Sheet	1	
127	RPS898	Mounting Bracket	1	
128	59651	Infill Plate	1	
129				
130	64198	Corner Platform Base	2	
131	64201	Pivot Boss	1	
132	64202	Pivot Spigot	1	
133				
134				
135				
136	RPT732.620050	3/4"Pitch Drive Chain	2	
137				
138				
139	SFT30	Bearing	12	
140				
141				
142	W0168	Ø62 Internal Circlip	2	
	59078	**Control Box Assembly Consists Of:**		
143	37279	Emergency Stop Button Complete	3	
144	59464	Module Box	1	
145	59465	Module Cable	7	
146	59466	CAN Slave Module	1	
147	59472	Box Base Plate	1	
148	TR500	Decal	1	
	59449	**Picking Web Assembly Consists Of:**		
149	-	Web Belt	3	
150	RPS105/2B	Web Rod c/w Sleeve	63	
151	RPS105/1B	Cranked Web Rod c/w Sleeve	126	
152	RPS105/3B	Joining Rod c/w Sleeve	1	
153	RPM419.362824	Joining Clip Set	3	
154	RPF240.150230	Web Bar Rivet	1134	
155	RPF240.150300	Connector Rivet	24	
156	RPGM019.00155	Clamp Plate	567	
157				
	RPS561	**Transfer Web (long) Consists Of:**		
158	-	Web Belt	2	
159	RPS561/1	Web Bar	117	

Machines from 2016

In-line Picking Table

Assy No 59058

Item	Part No.	Description	Qty.	Remarks
160	KA16049	Clamp Plate	230	
161	KA16040	Joiner	2 pair	
	RPS561/3AF	'F' Type Joiner	2 pair	
162	DIN661 5x30	Ø5x30 Rivet	a/r	
163	DIN661 5x23	Ø2x23 Rivet	a/r	
164	RPS561/2	Joining Rod	1	
	RPS561/2AF	Joining Rod (for 'F' type joiner)	1	
	59661	**Transfer Web (short) Consists Of:**		
165	-	Web Belt	2	
166	RPS561/1	Web Bar	98	
167	KA16049	Clamp Plate	192	
168	KA16040	Joiner	2 pair	
	RPS561/3AF	'F' Type Joiner	2 pair	
169	DIN661 5x30	Ø5x30 Rivet	a/r	
170	DIN661 5x23	Ø2x23 Rivet	a/r	
171	RPS561/2	Joining Rod	1	
	RPS561/2AF	Joining Rod (for 'F' type joiner)	1	
	KA16021	**Roller Assembly Consists Of:**		
172	KA16021/1	Ø80 Flanged Steel Roller	1	
173	KA16021/4	Spindle	1	
174	PH408	Seal	2	
175	PS843	External Circlip	2	
176	0000300504	Felt Seal	2	
177	6005RS	Bearing	2	

Machines from 2016

In-line Canopy Kit

Assy No 59445A

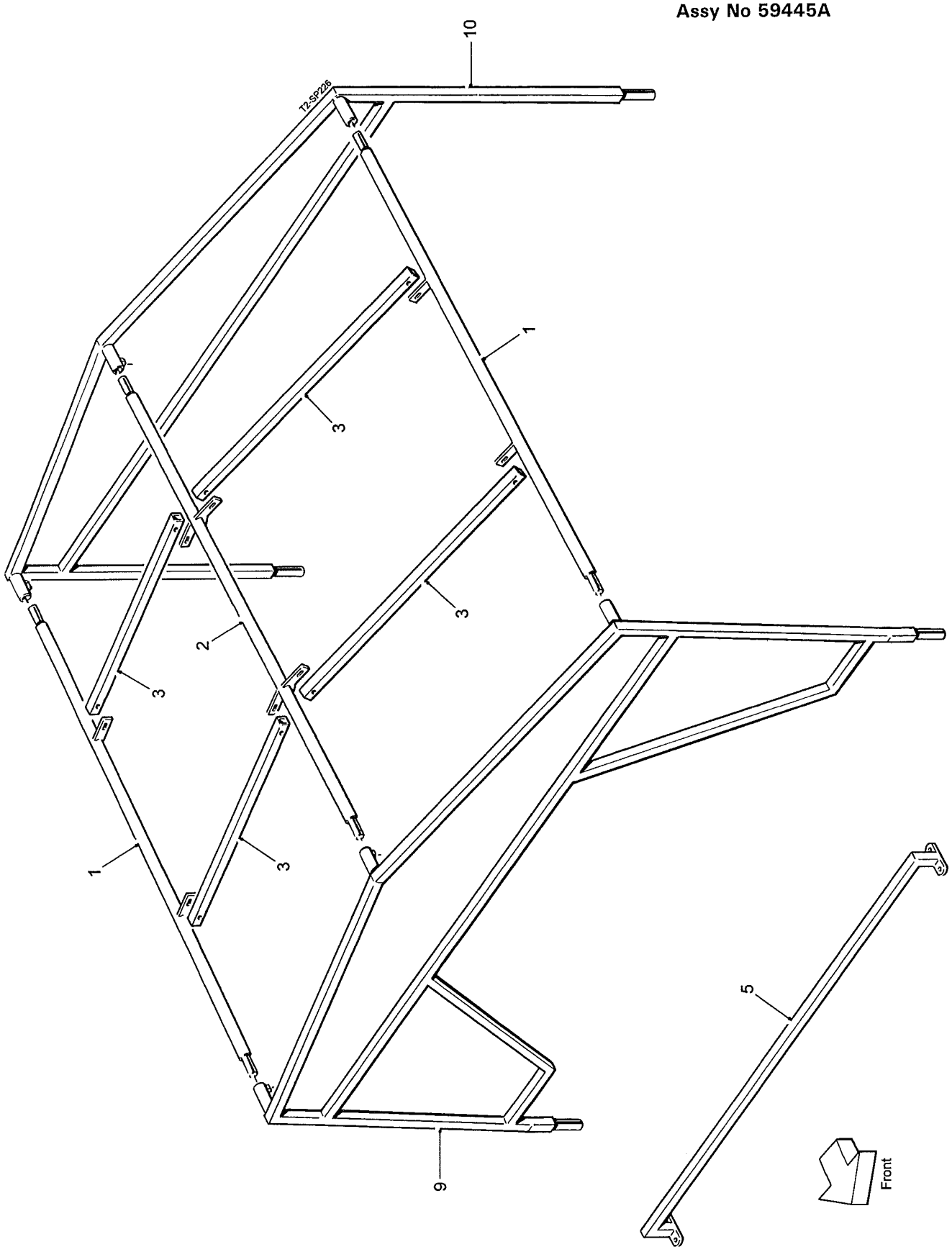

Machines from 2016

In-line Canopy Kit

Assy No 59445A

Item	Part No.	Description	Qty.	Remarks
1	64194	Outer Cross Tube	2	
2	64195	Inner Cross Tube	1	
3	64196	Roof Support	4	
4	64200	Canopy	1	(not shown)
5	64203	Canopy Support	1	
6				
7				
8				
9	RPS604	Front Frame	1	
10	RPS605	Rear Frame	1	

Machines from 2015

Easi-pic Table

Assy No 59557

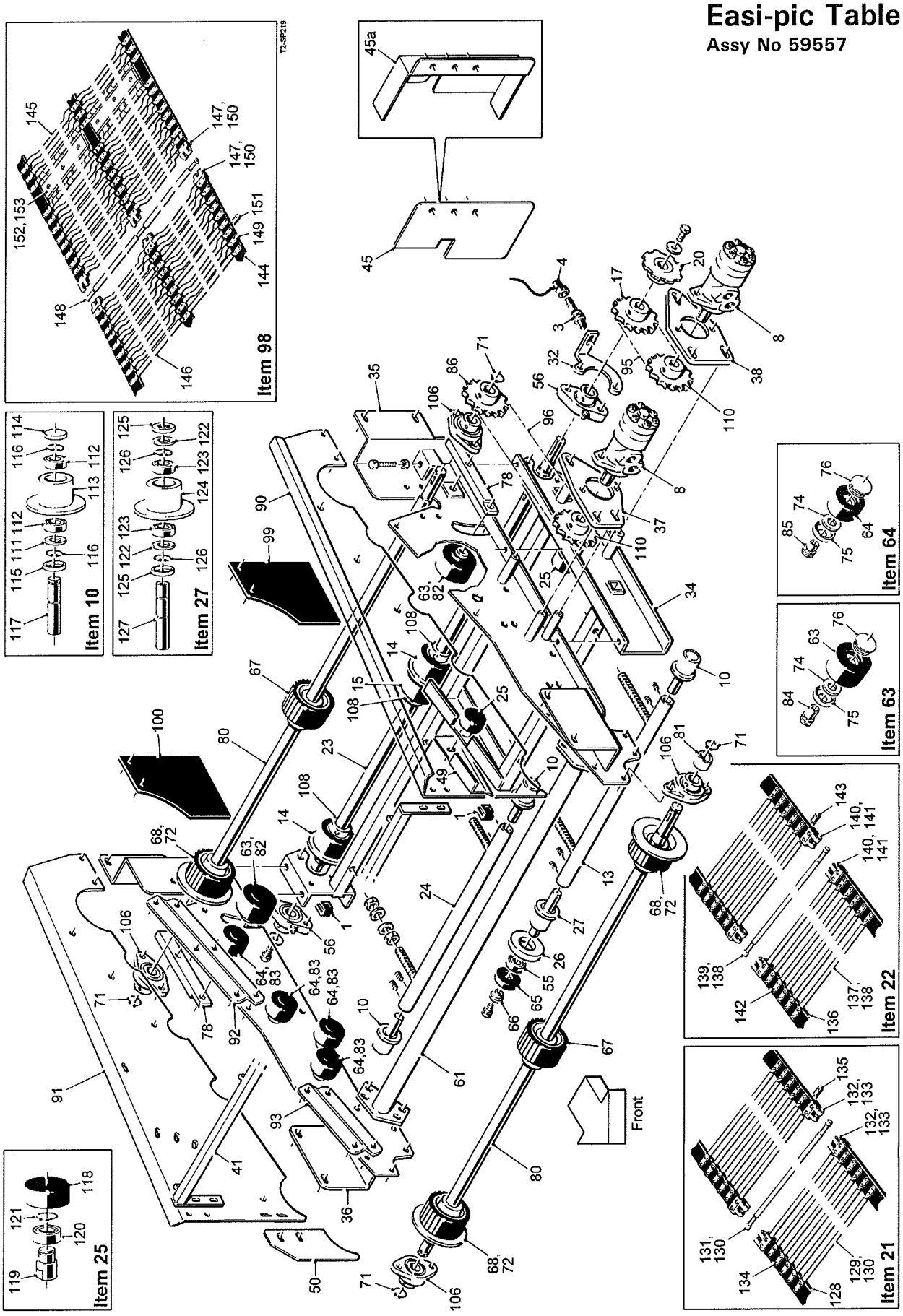

Machines from 2015

Easi-pic Table

Assy No 59557

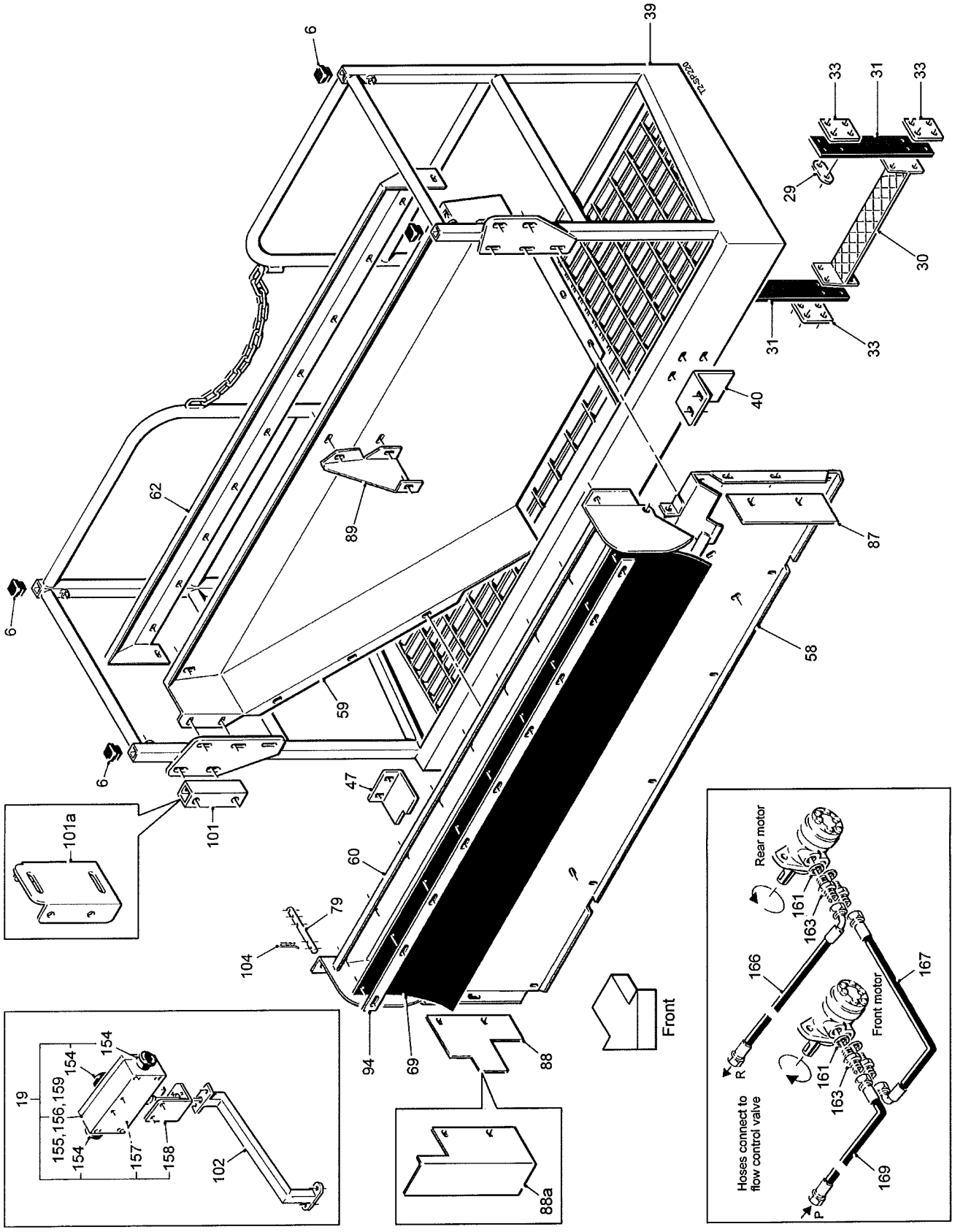

Machines from 2015

Easi-pic Table

Assy No 59557

Item	Part No.	Description	Qty.	Remarks
1	27159	Plastic Insert (40x40)	2	
2				
3	32037/1	Proximity Sensor	1	
4	32037/4	Sensor Cable (10m)	1	
5				
6	37753	Plasic Insert (30x30)	4	
7				
8	46855	Hydraulic Motor	2	
9				
10	51666	Roller Assembly	3	(see list at end)
11				
12				
13	56229	Long Roller Mounting	1	
14	56230	Flanged Drive Roller	3	
15	56231	Plain Drive Roller	1	
16				
17	59897	21T 3/4"Pitch Sprocket	1	
18				
19	59078	Control Box Assembly	1	(see list at end)
20	59151	Sensor Disc	1	
21	59212	Short Web Assembly	1	(see list at end)
22	59213	Long Web Assembly	1	(see list at end)
23	59220	Spreader Drive Shaft	1	
24	59221	Short Roller Mounting	1	
25	59222	Roller Assembly	2	(see list at end)
26	59323	Guard Roller	1	
27	59324	Roller Assembly	1	(see list at end)
28				
29	59469	Clamp Plate	2	
30	59470	Step	1	
31	59471	Step Strap	2	
32	59479	Sensor Bracket	1	
33	59485	Step Support Plate	4	
34	59544	Spreader Frame	1	
35	59545	LH Mounting	1	
36	59546	RH Mounting	1	
37	59547	Motor Plate	1	
38	59548	Motor Plate	1	
39	59549	Easi-pic Platform	1	
40	59556	Platform Support Plate	1	
	59556A	Platform Support Plate	1	Used on build 62762F
41	59596	Support Bar	1	
42				
43				
44				
45	59595	Infill Panel	1	
45a	59595A	Infill Panel	1	Used on build 62762F
46				
47	59866	Platform Support Plate	1	
	59866A	Platform Support Plate	1	Used on build 62762F
48				
49	64054A	Stone Shield	1	
50	64154	Infill Panel	2	
51				
52				

Machines from 2015

Easi-pic Table

Assy No 59557

Item	Part No.	Description	Qty.	Remarks
53				
54				
55	60052RS	Bearing	1	
56	LFTC35A	Bearing	2	
57				
58	RPA610.303669	Rear Panel	1	
59	RPA610.303673	Chute	1	
60	RPA610.303677	Hinge Panel	1	
61	RPA610.305863	Support Bar	1	
62	RPA610.304484	Top Chute Panel	1	
63	RPC700.300147	Ø95 Roller c/w Bearings	2	
64	RPC700.300227	Ø75 Roller c/w Bearings	8	
65	RPC700.300666	Rubber End Cap	1	
66	RPC700.300667	Spigot Washer	1	
67	RPC700.301543	Plain Drive Roller	2	
68	RPC700.303613	Flanged Drive Roller	4	
69	RPC730.303685	Rubber Deflector	1	
70				
71	RPF200.030200	Ø30 External Circlip	4	
72	RPF200.035250	Ø35 External Circlip	4	
73				
74	RPGM070.00446	Felt Seal	10	
75	RPGM089.00565	Roller Shield	10	
76	RPC620.303070	Cap	10	
77				
78	RPM102.302894	Adjuster Arm	2	
79	RPM146.303683	Pin	2	
80	RPM162.303630	Drive Shaft	2	
81	RPM176.304600	Spacer	2	
82	RPM176.306318	20mm Spacer	2	
83	RPM176.306320	30mm Spacer	8	
84	RPM180.303071	Roller Spindle	2	
85	RPM180.300308	Roller Spindle	8	
86	RPM182.306908	21T 3/4"Pitch Sprocket	1	
87	RPM224.303681	Panel	1	
88	RPM224.303682	Panel	1	
88a	64156	Panel	1	Used on build 62762F
89	RPM224.303684	Panel	1	
90	RPM224.309697	LH Side Panel	1	
91	RPM224.309698	RH Side Panel	1	
92	RPM225.310885	Mounting Plate (long)	2	
93	RPM225.310886	Mounting Plate (short)	2	
94	RPM256.302154	Clamp Strip	1	
95	RPT732.6200-	3/4"Pitch Drive Chain	1	
96	RPT732.6200-	3/4"Pitch Drive Chain	1	
97				
98	RPS105	28mm Pitch Easi-pic Web Assembly	1	(see list at end)
99	RPS107	LH Rubber Deflector	1	
100	RPS108	RH Rubber Deflector	1	
101	RPS125	Platform Spacer Block	2	
101a	64140	Platform Spacer Block	2	Used on build 62762F
102	RPS710	Control Box Arm	1	
103				
104	S86-82-002	Ø3x64mm R' Clip	6	
105				

Machines from 2015

Easi-pic Table

Assy No 59557

Item	Part No.	Description	Qty.	Remarks
105				
106	SFT30	Bearing	4	
107				
108	ST41M	Locking Collar	4	
109				
110	TBMW107	21T 3/4"Pitch Sprocket	2	
	51666	**Roller Assembly Consists Of:**		
111	0000300504	Felt Seal	1	
112	6005RS	Bearing	2	
113	46398	Flanged Steel Roller	1	
114	PH407	Seal	1	
115	PH408	Seal	1	
116	PS843	Ø25 External Circlip	2	
117	51664	Roller Spindle	1	
	59222	**Roller Assembly Consists Of:**		
118	0000301601	Roller	1	
119	59223	Spindle	1	
120	6204RS	Bearing	1	
121	12298	Circlip	1	
	59324	**Roller Assembly Consists Of:**		
122	0000300504	Felt Seal	2	
123	6005RS	Bearing	2	
124	46398	Flanged Steel Roller	1	
125	PH408	Seal	2	
126	PS843	Ø25 External Circlip	2	
127	59322	Roller Spindle	1	
	59212	**Short Web Assembly Consists Of:**		
128	59212/1	Web Belt	2	
129	56232/1	Web Rod	25	
130	56232/2	Rod Cover	26	
131	56232/4	Joining Rod	1	
132	51301/3	'F' Type Joiner (2 hole)	4	
133	DIN661 5x25	Ø5x25 Rivet	8	
134	DIN661 5x22	Ø5x22 Rivet	100	
135	46849/2	Clamp Plate	44	
	59213	**Long Web Assembly Consists Of:**		
136	59213/1	Web Belt	2	
137	56232/1	Web Rod	51	
138	56232/2	Rod Cover	52	
139	56232/4	Joining Rod	1	
140	51301/3	'F' Type Joiner (2 hole)	4	
141	DIN661 5x25	Ø5x25 Rivet	8	
142	DIN661 5x22	Ø5x22 Rivet	204	
143	46849/2	Clamp Plate	102	

Machines from 2015

Easi-pic Table

Assy No 59557

Item	Part No.	Description	Qty.	Remarks
	RPS105	**28mm Pitch Easi-pic Web Assembly Consists Of:**		
144	-	Web Belt	3	
145	RPS105/1B	Cranked Rod	60	
146	RPS105/2B	Straight Rod	29	
147	41029/3	F' Type Joiner	6	
148	RPS560/3AF	Joining Rod	1	
149	RPF240.150230	Rivet (for rod)	534	
150	RPF240.150300	Rivet (for joiner)	12	
151	RPW300.303144A3	Clamp Plate	267	
152	RPA610.308634	Bracket	6	
153	RPC730.308637	Nylon Panel	2	
	59078	**Control Box Assembly Consists Of:**		
154	37279	Emergency Stop Button Complete	3	
155	59464	Module Box	1	
156	59465	Module Cable	7	
157	59466	CAN Slave Module	1	
158	59472	Box Base Plate	1	
159	TR500	Decal	1	
160				
		Hydraulic Components Consist Of:		
161	11124	1/2"BSP Dowty Seal	4	
162				
163	12315	1/2"BSP M M Adaptor	4	
164				
165				
166	60476	1/2"Hose Assembly (2800mm)	1	
167	46620	1/2"Hose Assembly (450mm)	1	
168				
169	60695	1/2"Hose Assembly (2400mm)	1	

Machines from Serial No T2-168

Sweeping Clod Fingers

Assy No 59045

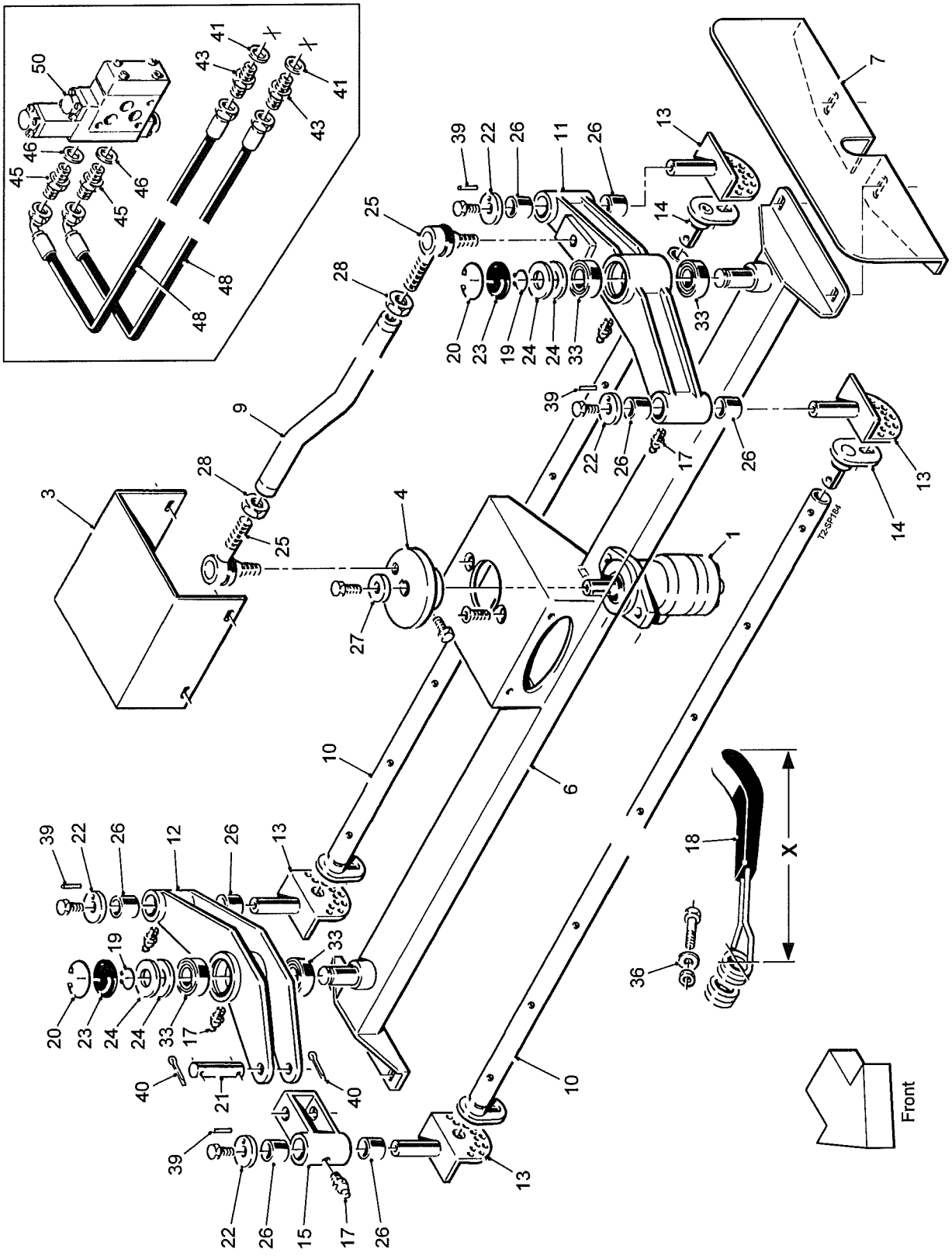

Machines from Serial No T2-168

Sweeping Clod Fingers

Assy No 59045

Item	Part No.	Description	Qty.	Remarks
1	44563	Hydraulic Motor	1	
2				
3	56823	Guard	1	
4	56824	Cam	1	
5				
6	59329	Mounting Beam	1	
7	59798	Finger Guard	2	
8				
9	RPA610.301139	Tube	1	
10	RPA610.301154	Tube	2	
11	RPA610.301165	Oscillator Arm	1	
12	RPA610.301202	Oscillator Arm	1	
13	RPA610.301207	Quadrant Plate	4	
14	RPA610.301209	End Plate	2	
15	RPA610.306023	Hinge Piece	1	
16	RPC632.301869	Decal	1	(not shown)
17	RPC648.081250	M8 Straight Grease Nipple	6	
18	RPC700.304701	Oscillator Paddle (X=480mm)	16	Option
	RPGM076.00594	Oscillator Paddle (X=425mm)	16	Option
19	RPF200.030200	Ø30 External Circlip	2	
20	RPF202.055200	Ø55 Internal Circlip	2	
21	RPGM031.00228	Pin	1	
22	RPGM065.00073	Brass Washer	4	
23	RPGM088.00005	Plastic Dust Cap	2	
24	RPGM088.00017	Sealing Ring	4	
25	RPGMB89.02017	M20 Ball Joint	2	
26	RPM148.302182	Brass Bush	8	
27	RPM196.300869	Washer	1	
28	RPF174.220000	M20 Half Nut	2	
29				
30				
31				
32				
33	6006RS	Bearing	4	Supercedes 60062RS
34				
35				
36	SS030011/005	Steel Spacer	16	
37				
38				
39	22067005/010	Ø5x10 Roll Pin	4	
40	22078005/025	Ø5x25 Split Pin	2	
		Hydraulic Components Consist Of:		
41	11124	1/2"BSP Dowty Seal	2	
42				
43	12315	1/2"BSP M M Adaptor	2	
44				
45	27459	M18x1/2"BSP M M Adaptor	2	
46	27461	M18 Dowty Seal	2	
47				
48	43207	1/2"Hose Assembly (2700mm)	2	
49				
50	RPS360-1	S/A Proportional Valve Slice	1	

Machines from 2016

Fall Breaker Kit (cascade type)

Assy No 59073

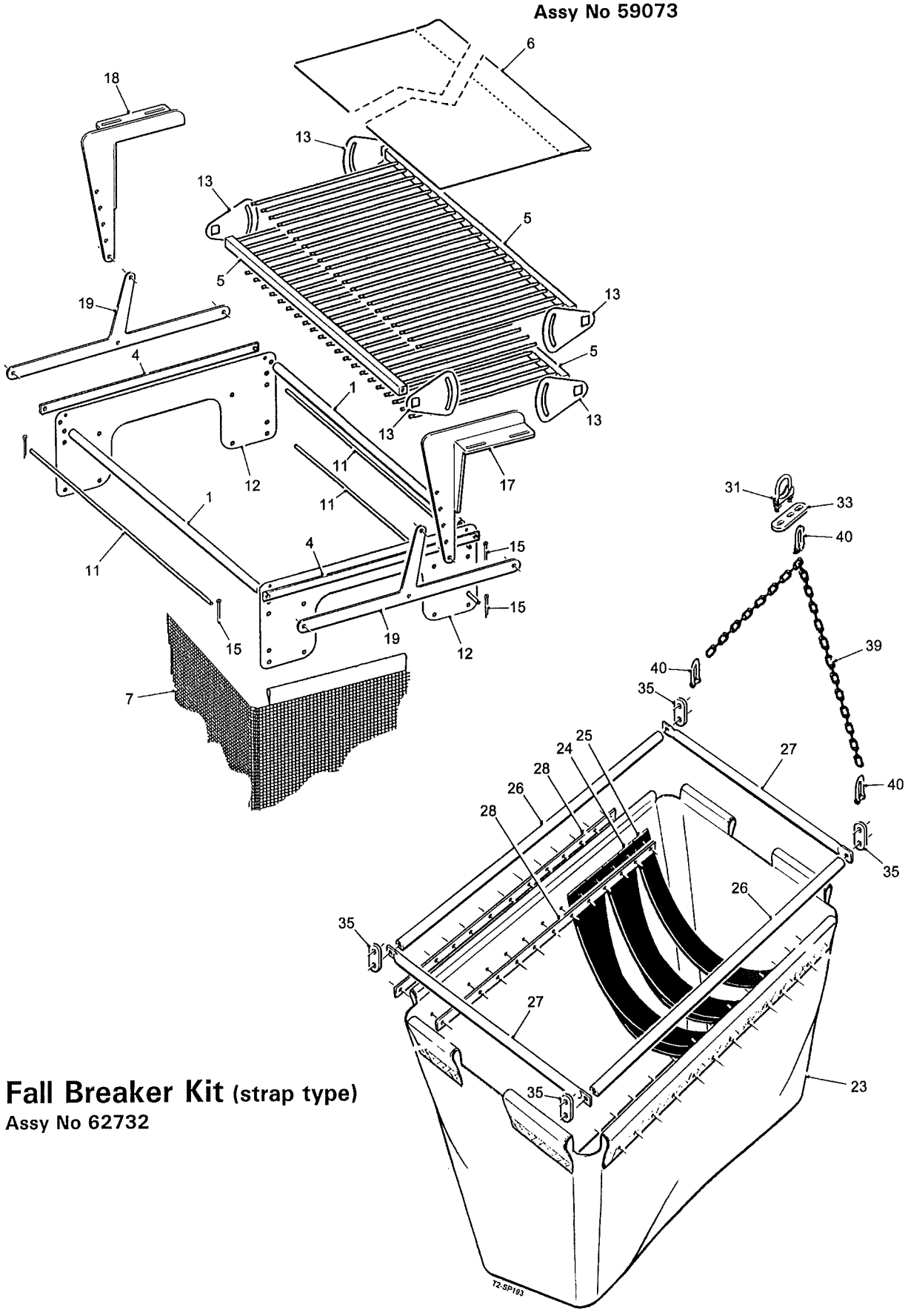

Fall Breaker Kit (strap type)

Assy No 62732

Machines from 2016

Fall Breaker Kit (strap type)

Assy No 64205

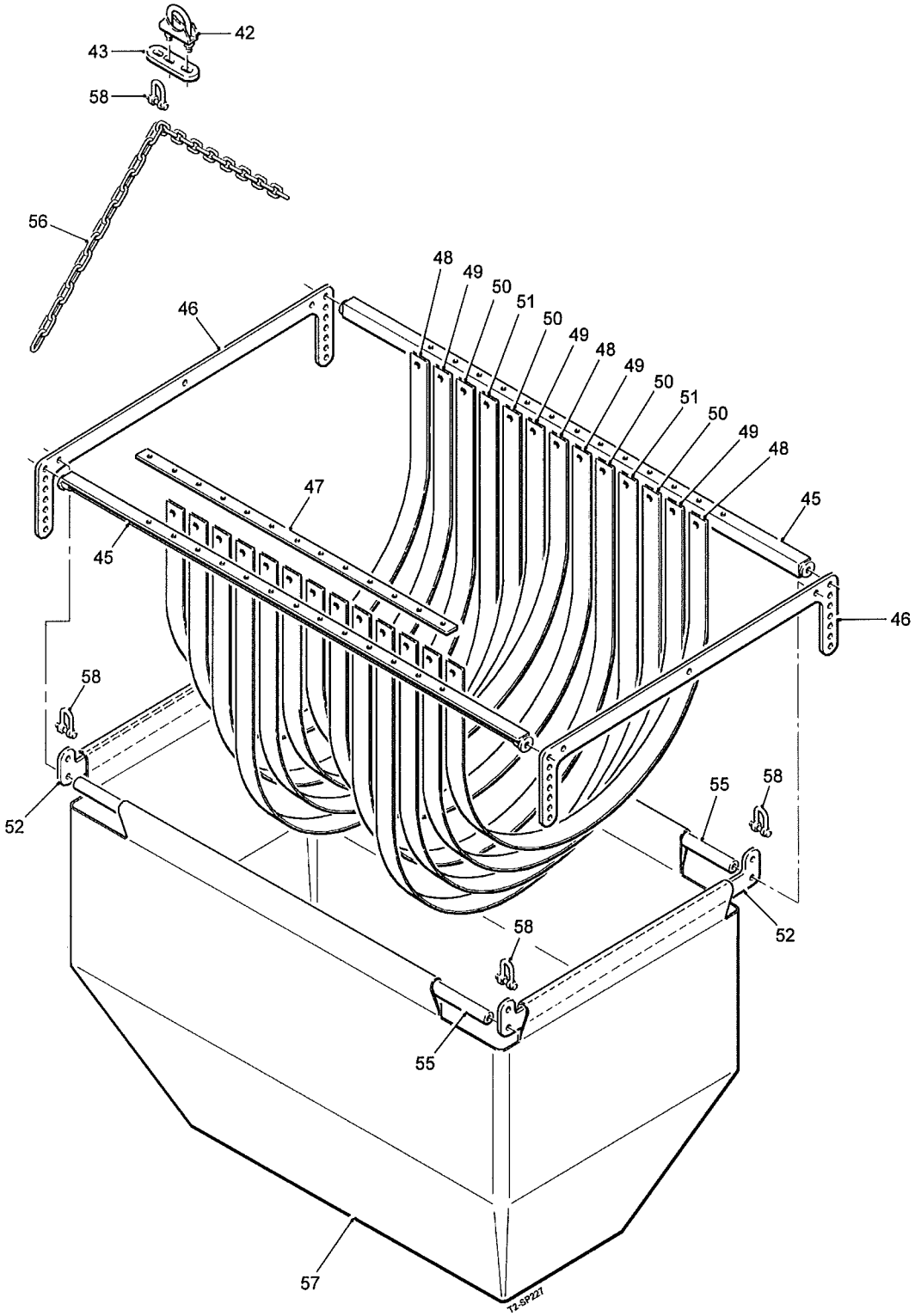

Fall Breaker Kits

Item	Part No.	Description	Qty.	Remarks
	59073	**Fall Breaker Kit (cascade type)** **Consists Of:**		
1	RPA610.311045	Spacer Bar (1300mm)	2	
2				
3				
4	RPC700.311051	Support Strip	2	
5	RPC700.311061	Nylon Brush Assembly (1300mm)	3	
6	RPC720.311053	Inner Flap (1300mm)	3	
7	RPC720.311054	Chute Cascade (1300mm)	1	
8				
9				
10				
11	RPM146.311047	Pin (1300mm)	3	
12	RPM225.311043	Plate	2	
13	RPM225.311044	Plate	6	
14				
15	22078003/032	Ø3x32mm Split Pin	6	
16				
17	62537	Front Chute Bracket	1	
18	62538	Rear Chute Bracket	1	
19	62949	Pivot plate	2	
20				
21				
22				
	62732	**Fall Breaker Kit (strap type)** **Consists Of:**		
23	42831	PVC Chute	1	
24	42913/1200	Fall Breaker Strap (short)	7	
25	42913/1500	Fall Breaker Strap (long)	6	
26	42920	Tie Bar	2	
27	42921/1	Side Tube	2	
28	42929	Mounting Strip	4	
29				
30				
31	58122	Ø35 Clamp Complete	2	
32				
33	59462	Support Plate	2	
34				
35	62733	Shackle Plate	4	
36				
37				
38				
39	RPC62.311064	Chain	2	
40	RPGMRP099.00086	Shackle	6	
41				
	64205	**Fall Breaker Kit (strap type)** **Consists Of:**		
42	58122	Ø35 Clamp Complete	2	
43	59462	Support Plate	2	
44				
45	64160	Strap Support	2	

Fall Breaker Kits

Item	Part No.	Description	Qty.	Remarks
46	64166	Side Adjuster Plate	2	
47	64167	Clamp Strip		
48	64168/1970	Canvas Strap (1970mm)	3	
49	64168/2170	Canvas Strap (2170mm)	4	
50	64168/2370	Canvas Strap (2370mm)	4	
51	64168/2570	Canvas Strap (2570mm)	4	
52	64204	Support Plate	2	
53				
54				
55	RPA610.311045	Spacer Bar (1300mm)	2	
56	RPC622.311064	Chain	2	
57	RPC720.311054	Chute Cascade (1300mm)	1	
58	RPGMRP099.00086	Shackle	6	