JUKO 100

1 row sugar beet harvester

with shares and continental lifting web

Instructions and Parts List

From serial number 6300-7151...

9.9.1997

CONTENTS

		page
1.	Introduction and serial number plate	3
	How to use the Operating Instructions	4
2.	Introduction and technical specifications	5
3.	Safety instructions	6
	Warnings and prohibitions.and Operating instructions for rims	7
4.	Transportation and lifting of the machine	8
5.	Operation	9
6.	Operating instructions	
6.1.	Hitching the harvester to the tractor	10
6.2.	P.T.O. shaft	10
6.3.	Hydraulic system	11
6.4.	Harvesting	
6.4.1.	Opening up the field	11
6.4.2	Main harvesting	11
6.5.	Adjustments	
6.5.1.	Pretopper	12
6.5.2.	Precision topper unit	12
6.5.3.	Topper flail assembly	13
6.5.4.	Lifting shares	13
6.5.5.	Cleaning drumps	14
6.5.6.	Elevator to tank	14
6.6.	Important points to note	14
7.	Maintenance	16
7.1.	Lubrication chart	17
7.2.	Gear box	20
7.3.	P.T.O. shaft	20
7.4.	Torque	20
9.	Storing	21
10.	Terms of warranty	23

12. SPARE PARTS LIST

Frame	24-29
Tank	30-33
Power transmission chart	34-41
Lifting frame	42-43
Hydraulic pretopper	44-47
Topping unit	48-55
Hydraulic flipper unit	56-57
Share	58-59
Lifting elevator	60-65
Cleaning unit	66-85
Tank elevator	86-95
Hydraulics system	96-107
Light, set	108-109

OPTIONAL EQUIPMENT:

X-9112 Automatic steering unit
X-6105 Hydraulic track width adjusting
X-3135 Steering unit

1. INTRODUCTION AND SERIAL NUMBER PLATE

OY KONGSKILDE JUKO LTD is a Finnish factory making agricultural machinery and belongs to the KONGSKILDE company. Our production line includes

1. seed drills and combination placement drills
2. planters
3. potato harvesters
4. sugar beet harvesters
5. stone collecting machine

We would like to thank you for choosing a high quality JUKO machine. Please read the Instructions carefully before commencing work. The Instructions and Part List has been divided into sections shown in the Contents, which will help you to find the information you need. For the troublefree work of the machine as well as for the validity of the warranty, it is crucial to follow the checking and maintenance instructions described in the Operating Instructions.

Please pay careful attention to the advice, warnings and prohibitions concerning the operating of the machine. They are made to ensure your personal safety and proper operation of the machine. The most important instructions and warnings are printed in bold type.

If you have any questions of comments concerning JUKO machinery, please contact first the dealer, and if necessary, the manufacturer. In case you need infromation on maintenance and spare parts, please contact the dealer or directly the manufacturer, JUKO LTD, tel. + 358-2-4393 200, fax + 358-2-4393 210.

After purchasing the machine, please fill in the following picture of the serial number plate with the information that is in the serial number plate of your machine. When contacting a JUKO dealer, please mention the type and serial number in order to avoid misunderstandings and delays.

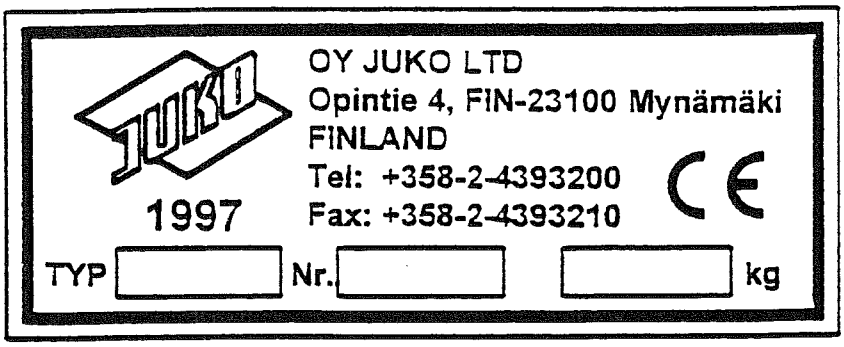

We hope that your JUKO machine will prove an excellent tool and serve you for a long time.

How to use the Operating Instructions

These Operating Instructions are made for professional farmers. General skills and knowledge of farming and agricultural techonology are required to operate the combination placement drill.

The figure of a triangle draws your attention to a matter of extreme importance.

A triangle with an exclamation mark informs you of an important point concerning safety.

NOTE!

The machinery and the Operating Instructions are subject to alterations by Juko Ltd.

2. INTRODUCTION

The design of the sugar beet harvester JUKO-100 is based on the farmers´ experience and the knowledge gained from previous machines. The main aims for the design have been: easiness of harvesting, rellabillty under all conditions, clear and clog-proof construction.

JUKO-100 is a one-man operated machine which cleans and lifts the beet into the tank. The pretopper starts the process of lifting by cutting the tops. The precision topper unit, driven by a depth-control wheel, carries out the final topping before the share.

A self-seeking share lifts the beet to cleaning drums by means of a lifting tunnel. A desired cleaning efficiency can be attained by adjusting the speed of rotation of the drums.

JUKO-100 is equipped with a large and high tipping tank which is positioned at the front of the harvester so that the weight of the harvested beet is transferred to the rear wheels of the tractor.

TECHNICAL SPECIFICATIONS

Length, cm	665
Width, cm	300
Height, cm	320
Weight, kg	2670
Volume of the tank, m3	4,4
Tipping height of the tank, cm	280
Track width, adjustable, cm	180-240
Tyres	12.4-24"
	5,5x15.00 4PR
-air pressure	0.8 - 1.6 kp/cm2
Power requirement	30 KW (40 hp)
Gear box oil quantity	1,2 l
Required hydraulic oil flow	approx. 25 l/min

3. SAFETY INSTRUCTIONS

When using the machine, make sure there is adequate safety distance around the machine.

The driver of the machine is responsible for damage caused by the machine to other people.

Before starting the machine, make sure that there are no people in the area where the machine will be used.

Avoid abrupt moves when using the machine.

When using the machine, always observe the functions of the machine, so that you can stop the machine immediately in case of malfunction or danger.

In an emergency, stop the tractor and the JUKO machine immediately to avoid additional damage and accidents.

It is forbidden to remove the covers and safety equipment when using the machine.

Always stop the machine and the tractor during maintenance.

Maintenance, adjustment and other work are forbidden when the machine or part of it is lifted up if the machine is not properly supported.

Carry out maintenance work on an even, firm surface to prevent the machine from moving or falling down.

NEVER GO UNDER AN UNSUPPORTED MACHINE!

Make sure the lightning and other conditions are sufficient when handling the machine.

WARNINGS AND PROHIBITIONS

It is strictly forbidden for any persons to stand or sit on the machine during any transportion drive.

DRILL NEVER GO UNDER AN UNSUPPORTED.

Do not use the machine for other purpores than indicated in the instructions.

OPERATING INSTRUCTIONS FOR RIMS

The manufacturer of the rims used in JUKO machines has given the following instructions for its products:

1. Rims

Rims are an important component that affect the safety and drivability of the vehicle. Rims must be free from defect and approved both for the tyre and the particular vehicle.

NOTE! Never make modifications or repairs in the rims.

There are several things that affect safety.
The responsibility for any alterations and repairs that are not in accordance with the instructions of the manufacturer fall on the person who carries out such alterations or repairs.

2. Fitting and removing tyres

Tyre fitting may only be done by a skilled professional who has the appropriate training and experience as well as the appropriate tools. Improper fitting can cause a damage that is a safety risk.

3. Retightening

The tightening screws and nuts of the rim should usually be tightened after the vehicle has been used for a while after the rims have been fitted. Follow the instructions given by the manufacturer of the vehicle.

4. Repairing tyres

A tyre should not be repaired while fitted on a rim, as inside checking of the tyre would be impossible. There is also a risk of tyre explosion.

4. TRANSPORTATION AND LIFTING OF THE MACHINE

Transportation on public roads

Check the headlights and reflectors before starting off.

Make sure that the light and the warning triangle for slow vehicle can be seen.

Make sure that the machine is empty of load and persons when transporting it on public roads.

Make sure that power transmission is set off when transporting the machine on public roads.

When transporting or moving the machine without using a tractor, the following instructions must be followed:

When lifting the machine, only marked points may be used as lifting points.

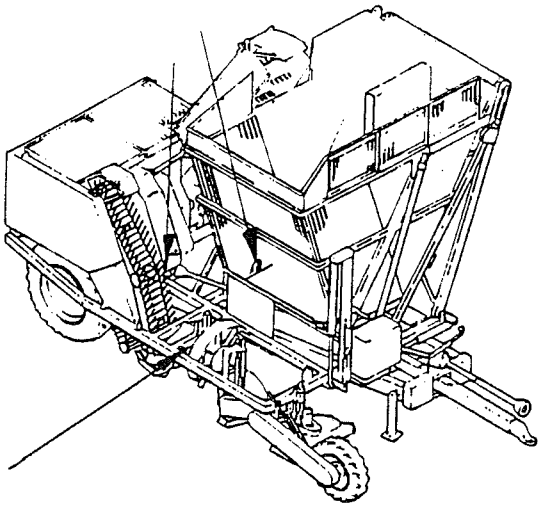

Lifting chains and belts have to be long enough so that they do not chafe or damage the machine.

Only approved and absolutely undamaged lifting machinery may be used in lifting the machine. The lifting machinery must be dimensioned for at least twice the weight given at the plate.

The person who carries out the lifting must ensure that no person may at any stage go or pass under the drill.

When moving the drill to the platform of a lorry, the provisions of road traffic legislation must be observed. Especially the total height of the load must be checked carefully. Also ensure that the load is properly tied on the platform.

When lifting the machine with a forklift or a similar vehicle, make sure the machine is not damaged.
This type of lifting is not recommended.

5. OPERATION

First read carefully the Operating Instructions and the Safety Instructions. The machine may not be used before reading the instructions!

Operation of a new machine:

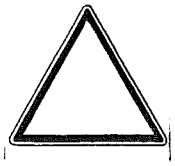

NOTE! The machine has been tested and adjusted by JUKO for the testing on the factory. The adjustments are average adjustments. In order to obtain the best possible results, make the adjustments suitable for your own needs before using the machine.

In a new machine the parts settle in place only after a couple of hours' work. Therefore the tightness of all screws, nuts and chains must be checked after 1-2 hours of work. The torque levels can be seen in Section 7.4.

Before further use for a new season:

CHECK:

- tyre pressure
- condition of roller chains; change if needed
- condition of bearings; change if needed
- worn coulters; repair or change if necessary
- the oillevel of the gear box, order oil if needed
- tightness of screws, nuts and chains
- condition of hydraulic hoses and adaptors
- lubrication and greasing of the machine
- the wearness og the mainweb and the drive sprockets

Change broken parts if needed.
Order spare parts well before the following season.
When ordering spare parts, mention the model and serial number of the machine.

6. OPERATING INSTRUCTIONS

In order to guarantee safe operation of the machine, it must be used according to the Operating Instructions.

In operating the machine, the instructions as well as the prevailing conditions (temperature, moisture of the soil, etc.) must be taken into account. The adjustments are made on the basis of the conditions. Also make sure that the machine is ready for use.

Read carefully the detailed operating instructions that follow.

6.1. Hitching the harvester to the tractor

The tractor s wheel centre has to be adjusted so that it is three times the row width. The harvester is hitched to the tractor s drawbar or pick-up hitch. It is recommended to use an extra long pick-up hitch (about 150 mm).

6.2. P.T.O. shaft

Before mounting the power shaft, make sure that the shaft and the splines are clean and undamaged. The P.T.O. shaft is fixed to the tractor by pushlng it onto the tractor s drive shaft until the locking pin of the P.T.O. shaft locks in the slot on the drive shaft. Make sure that the P.T.O. shaft is firmly in its place.

The shaft must be the correct length to avoid damaging universal joints and endangering personnel.

The correct length of the P.T.O. shaft is calculated as follows: The outer part of the P.T.O. shaft is fitted to the drive shaft and the inner one to the harvester without pushing them into one another.
In the longest position when the machine is set for operation, the inner shaft part should still be 15 cm inside the outer one. In the shortest position there should still be a minimum of 3 cm free space for pushing in. The shaft can be cut to the correect length wiht a hack saw.

If the P.T.O. shaft is originally too short, it has to be replaced by the dealer. Do not forget to fix the shaft guard locking chain. Do not exceed 540 r.p.m. on the P.T.O. shaft.

Please, check that the P.T.O. shaft is equipped with an overload clutch.

6.3. Hydraulic system

The hydraulic system of the harvester is driven by the tractor s hydraulics. The fixing plate for the operation levers is fitted in the most convenient position for the driver.

The pressure and return hoses are connected to the tractor according to the dealer s instructions.

NOTE! N.B. THERE MUST NOT BE ANY BACK PRESSURE IN THE RETURN HOSE.

When the machine is disconnected from the tractor, the hoses must be disconnected, too,and the lever unit should be placed on the pin which is located at the end of the lifting cylinder. The tractor s hydraulic oil should always be checked once the hydraulics have been connected up and operated with the machine stationary to ensure all hydraulic functions are operating correctly.

The tipping ram cylinders of the tank of JUKO-100 are fitted with security valves which close if hydraulic hoses are damaged. When lowering the tank with rapid movements of thelevers, security valves might close and the tank will not come down. In this case lift the tank a little and then slowly move the lever to avoid the action of the security valve.

6.4. HARVESTING

6.4.1. Opening up the field

With the sugar beet harvester JUKO-100 you can also open up the field to be harvested.

The left wheel of the harvester is adjusted so that it is placed between the rows. This is done by lifting the machine on the support leg. To operate the support leg, let it down and reverse the machine so that it will stand on the leg. The wheel can then be easily adjusted to the desired position.

With the steering cylinder the harvester is adjusted to run so that the wheels of the tractor will run in between the rows.
Distance between the drawbar and the row to be lifted is twice the row width.

Four (4) rows have to be harvested to open up the field, after which the track width is adjusted for main harvesting.

6.4.2 Main harvesting

After opening up the field, the track width of the harvester has to be adjusted so that the tractor and the harvester will run in the rows which already have been harvested. The left wheels of the harvester and the tractor will run in the same row.

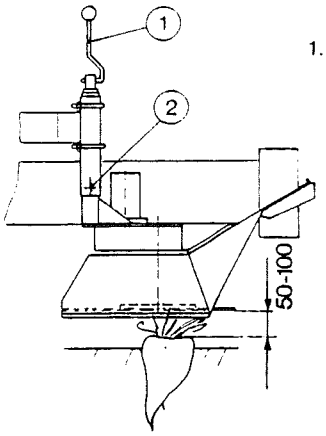

1.

6.5. ADJUSTMENTS

6.5.1. Pretopper (Fig. 1)

The height of the pretopper (points 1 and 2) is adjusted so that there will be about 50-100 mm of the top left. The fixing of the pretopper knives should be checked when doing the test runs.

6.5.2. Precision topper unit (Fig.2)

Distance between the teeth of the gauge wheel and the topper knife should be approximately 10 mm. It can be adjusted from point (1) (Fig. 2). Too big an opening will cause poor topping, whereas too small an opening may lead to a blockage.

The topper knife should be level; adjust it from point (2). If the knife is too "taking",it may cause overtopping and damage the beet.

The vertical movement of the gauge wheel is adjusted by the springs (3). The driving speed and the different eight of the beet determine the pressure of the topper unit. hen topping is insufficient, you have to add to the pressure y means of the spring (4).

The gauge wheel cleaner which is adjusted from point (5) should be as close to the surface of the topper wheel as possible.

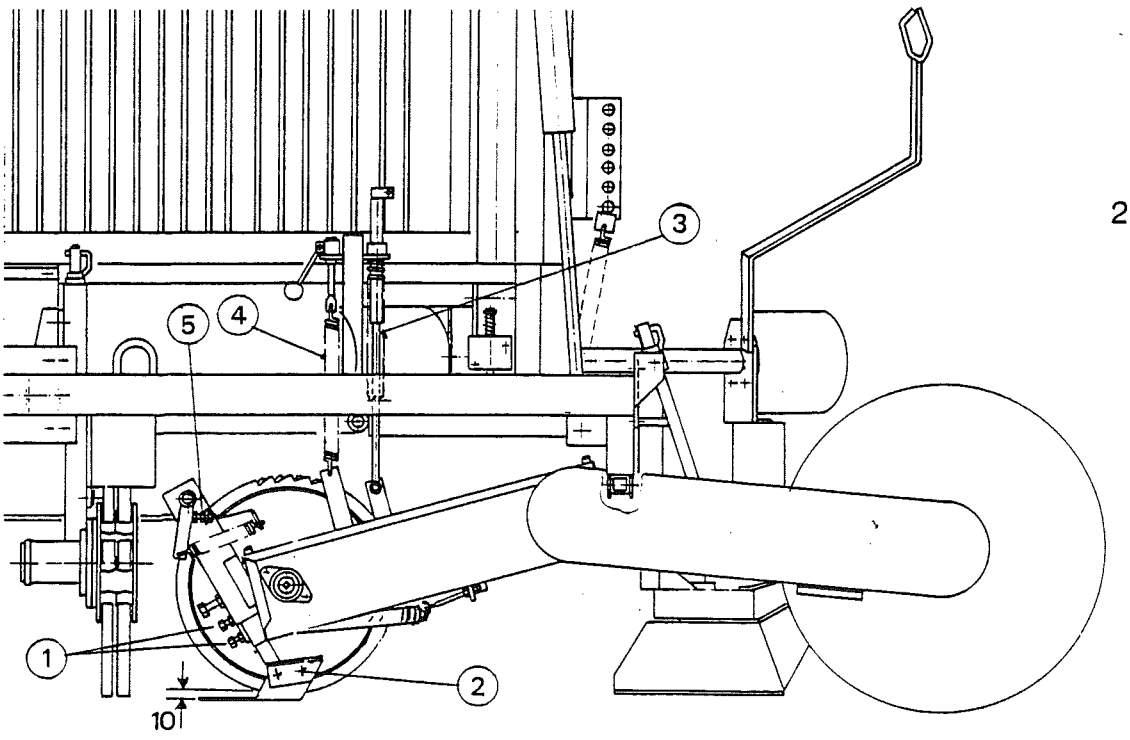

2.

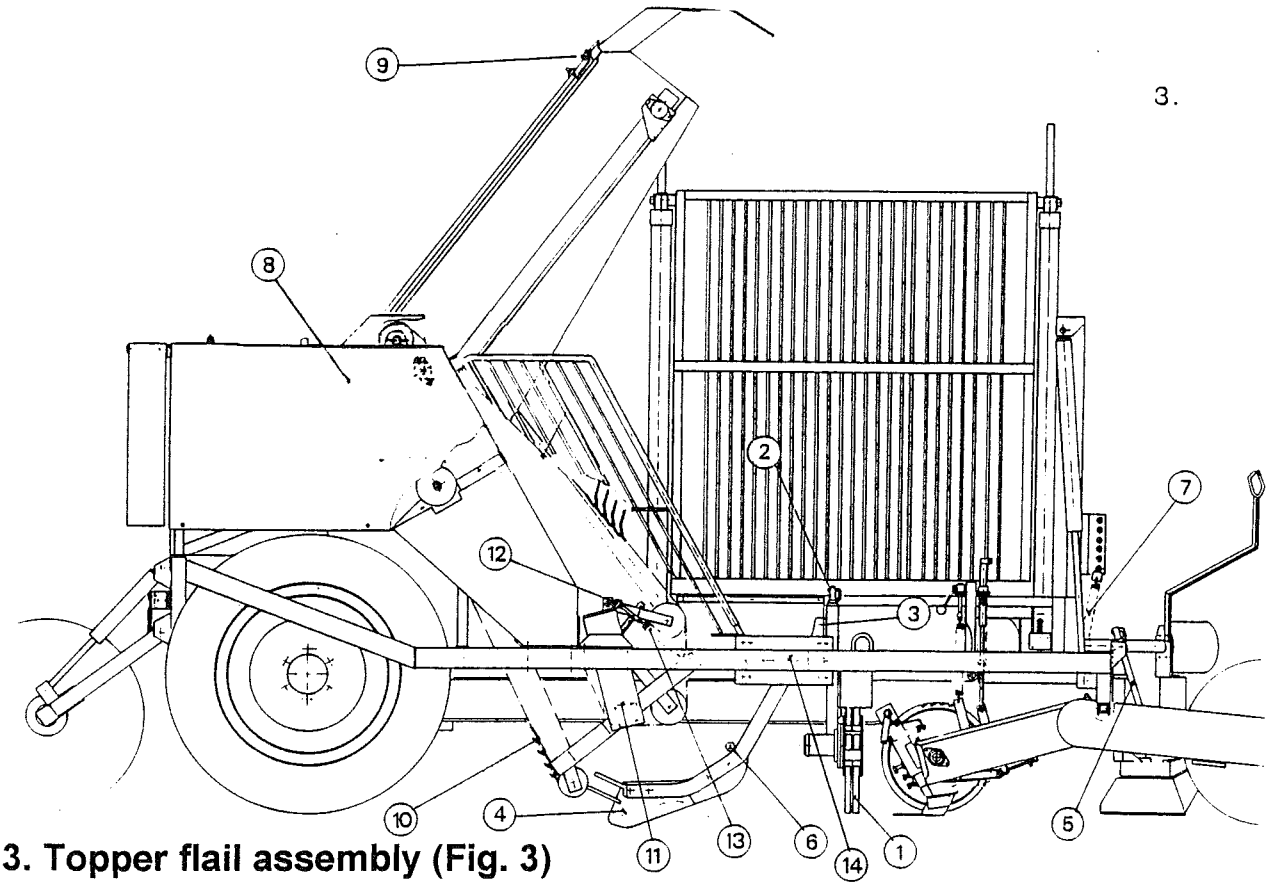

6.5.3. Topper flail assembly (Fig. 3)

The topper flail assembly (1) is adjusted from point (2) to such a height that the row which is to be harvested, is clean of tops. If the topper flail assembly is adjusted too low, the rubber fingers will rapidly wear off.
If the topper flail assembly knocks out the beet, it is also possible to adjust it sideways (to the left), point (3).

6.5.4. Lifting shares (Fig. 3)

The working depth of the lifting share (4) is adjusted from screw (5) to be as shallow as possible but still enough to bring up the beet but as little soil as possible into the conveyor tunnel. If no soil at all reaches the cleaning rollers, which may happen on light soils, the working depth of the shares should be incresed to avoid damage on the beet.
The share opening can be adjusted by the screw (6) depending on the type of the soil and the size of the beet.
When the soil is heavy, the recommended share opening is approx. 25 mm, and when the soil is light, it is up to 60 mm.

When harvesting in wet and soft conditions, you can support the digger unit by means of a supporting spring (7). In normal conditions the spring can be taken off altogether. The height and angle of the li5ting shares can also be adjusted by means of screws (14), for example if the shares are worn.

NOTE! When adjusting the share, an additlonal chain link for the lower elevator might be needed.

From the share the beet are guided into the lifting tunnel by means of guide pins. The lifting chain rotating in the opposite directions lift the beet to the cleaning drums.

6.5.5. Cleaning drums (fig 3)

The adjustment of the speed of rotati n of the drums is carried out by changing the sprocket (7) to increase or to decrease the speed by approx. 20 %.

6.5.6. Elevator to tank (Fig. 3)

By adjusting the guide plate (8) you can control the flow of the beet from the elevator into the tank.

6.6. IMPORTANT POINTS TO NOTE

6.6.1. When tipping the tank you must disengage the P.T.O. shaft and LOWER THE DIGGER UNIT TO THE GROUND.

6.6.2. The tipping should be carried out when the machine stands on level ground, because on a slope the machine may tip over.

6.6.3. It is strictly forbidden to go under the machine parts which are lifted hydraulically such as the digger unit and the beet tank without them being locked or blocked in position.

6.6.4. The existing safety devices such as safety clutches, railings, chain guards etc. must not be removed. Broken parts should immediately be repaired or replaced.

6.6.5. Slip clutches have been tested at the factory so there is no need for adjusting. They have to be kept as loose as possible. If the clutch is too tight, it cannot get loose in case of overload situation.

6.6.6. Do not adjust the elevators too tight. Too tight chains cause much wear and the disadvantage of stones increases. The tightness of the lower lifting elevator is adjusted with adjusting screws (figure 3). The tightness of the springs is adjusted with a nut so that in normal conditions the frame of the end wheels is kept against the adjusting screws. When the chain in the lifting elevator hits a stone, the spring gives in so that the chain will not stop. The tightness of the upper elevator is adjusted with a crank.

6.6.7. The chains of the elevator to tank should not be adjusted too tight because it causes excess wearing of the chains and sprockets and could also cause problems with stones.

6.6.8. The manufacturer is not responsible for the damage caused by changing the structure of the harvester.

7. MAINTENANCE

Proper maintenance will ensure that your drill operates smoothly and without stoppages during the busy sowing season.

1. Before commencing work, check that all screws and nuts are tightened according to Chart 1. Especially on a new drill the screws and nuts should be checked and tightened after a few hours' work.

2. Check the tyre pressure and make sure they correspond to those given in the the Technical Specifications.

3. The tightness of the wheel bolts must be checked regularly (see Operating Instructions for rims in Section 3).

4. Check and lubricate all bearings regularly.

Check, tighten and lubricate all chains regularly.

More detailed instructions on lubrication points and hours between lubrication are given in the Maintenance Instructions that follow (see next page).

Use high quality greases and oils for lubrication. Follow the recommendations and instructions for their use.

5. Check the frame and other constrictions visually before the season to eliminate further damage by broken parts.

6. Clean the drill carefully after each use. This increases the reliability and service life of the drill. The drill can be cleanend using water under high pressure, but special care should be taken to avoid directing the jet on electric instruments and other parts that may be damaged (e.g bearings).

7. After the cleaning, lubricate all parts that may rust lightly with oil and let the machine idle for a while to spread the lubricants and remove water.

8. Paint the metal parts that have been worn in use.

9. During maintenance, make sure that lubricants and other oils or greases do not end up in the environment.

7.1. LUBRICATION

Proper maintenance and lubrication will ensure a trouble-tree operation at harvest. The lubrication chart in this manual shows the greasing points.
Lubrication should be carried out using a high-quality multipurpose grease. Check that the mouth of the grease gun and the nipples of the harvester are clean. Clogged nipples should be opened and faulty nipples replaced.
Grease should be pumped into the nipples until clean grease extrudes from the sides of the bearing, tube, etc. Surplus grease should be carefully wiped off.

The roller chains should be lubricated using clean SAE 20 lubrication oil. Do not use grease as it will not penetrate the links of the chains.
At the end of the season the chains ought to be removed and carefully cleaned using paraffine oil or gasoline. The chains should then be completenly immersed in molten graphite grease or alternatively boiled for about an hour in graphite grease. This way it won`t be necessary to lubricate the chains during the season.

Before storing the machine it has to be cleaned and washer thoroughly. After drying, the shares, side cutting discs and other metal surfaces worn shiny must be protected against rust with grease or oil.
The inner walls of the main web frame should be painted if necessary. The roller chains should be removed and cleaned and treated as explained above.
The harvester should be checked and any faults repaired well before the following season.

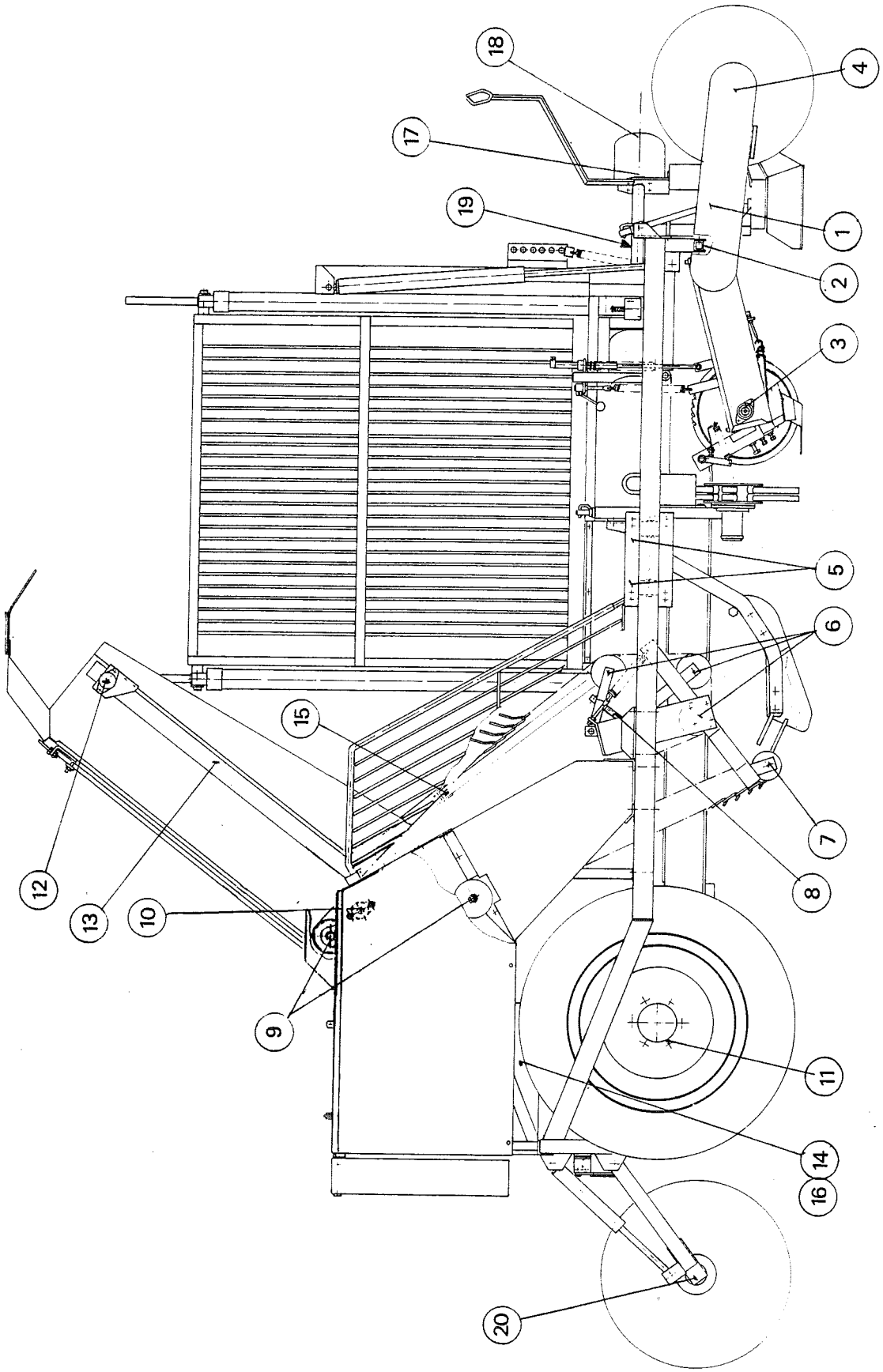
18
4
17
19
1
2
3
5
6
15
12
13
10
9
7
8
11
14
16
20

7.1. LUBRICATION OBJECTS

Number of lubricating objects and intervals

Object	Ref	Once a day	Once a week	Once a season
Precision topper				
Depth-control screw	1			1
Fixing tube	2			2
* Flange bearings	3			6
Wheel hub	4			1
Lifting shares	20			
Collar bearing	5			2
Lifting elevator				
Upper elevator idler wheels	6		6	
Lower elevator idler wheels	7	2		
Upper elevator adjusting screw	8			2
Collar bearings/shaf	9		4	
Collar bearings/ upper elevator axle	10			2
Cleaning drums				
* Drum bearings			14	
* Other bearing units			4	
Lifting frame				
Rear axle bar	11			2
Elevator to tank				
* Bearing units	12			4
Supporting wheels	13			4
Idler wheel	14	2		
Lift joint points	15			8
Tubes for fixing frame of idler wheel	16		2	
Main frame				
Bearings of auxiliary shaft	17		2	
P.T.O. shafts (3 pcs)	18		6	
Drawbar roller	19			1
Steering plate,circlip	20			1
Runner of lifting arms				2
Sliding surfaces of tank				2
Tightening and adjusting screws				1

* The lubrication has to be carried out after every pressure-wash.

7.2. GEAR BOX

The gear box oil must be changed after the first 20 hours of use, and thereafter every 100 hours. The oil level should be checked every day by opening the oil level screw on the gear box lid. The oil must be level with this check hole. Use high quality gear oil SAE 90. The oil volume of the gear box is 1,2 l.

7.3. P.T.O. SHAFT

Use clean mineral oil and lubricate as indicated in the instructions.
After a longer period of storage the shaft should be cleaned and lubricated. The inner side of the outer shaft tube should be greased.
Check the overload clutch by making it slip by force.
The above instructions refer to all shafts on the harvester.

7.4. TORQUE

If there are no other instructions elsewhere, use the following torque values when tightening screws. The torque values depend on the diameter and hardness of the screw (hardness is indicated in the head of the screw).

Torque Nm

Diameter mm	Hardness 8.8	10.9
5 mm	6	9
6 mm	11	17
8 mm	28	40
10 mm	55	80
12 mm	95	140
16 mm	235	350
20 mm	475	675
24 mm	825	1170
30 mm	1630	2320

9. STORING

GENERAL

Before storing the machine should be carefully cleaned, lubricated and adjusted according to the instructions.

The tension of all strings should be released.

Part of the cleaning can be made using water under high pressure, but care should be taken to avoid directing the jet directly on the bearings and other parts that may be damaged by the pressure.
All joints, chains etc. are maintained and lubricated.

Unpainted and uncovered metal parts that get worn out in use should be treated with oil for storing over the winter.

The drill should be stored under roof in a dry and dustless place. If this is not possible, the drill must be covered with a tarpaulin.

The drill must be emptied before storing.

DISPOSAL, BREAKING UP AND RECYCLING

1. Disposal of hoses, oils as well as rubber and plastic parts should be carried out according to official regulations.
2. No special measures are needed to dispose of the metal parts.
3. Recycling of all material and parts is recommended.

TERMS OF WARRANTY

The manufacturer, Oy Juko Ltd, grants to its products warranty, which is valid under following terms:

I Warranty period is one year from the date of delivery to the final customer, however, this date of delivery should not be later than two years from the date of delivery from the manufacturer, or the following operated maximum acreages per one machine:

1. seed drills	200 ha
2. planters	100 ha
3. potato diggers	10 ha
4. potato harvesters	50 ha
5. sugar beet harvesters	75 ha/row
6. stone collecting machines	50 ha.

Which ever, year or acreage, comes first is applied.

II Warranty is valid also for spare parts which are supplied from Oy Juko Ltd or an authorized Juko dealer.

III Warranty covers material or manufacturing faults. In case an acceptable warranty, manufacturer will supply a new or an approvingly repaired part.

IV Warranty does not cover following:
- damages caused by careless handling or storaging
- damages caused by normal wearing
- parts which are worn normally
- undirect costs as standing costs, loss of income and loss of handled material caused by a failure covered by guarantee
- all kind of losses caused by parts which are supplied from elsewhere than Juko Ltd or authorized Juko dealer
- freight costs
- repairing or travel costs

V Oy Juko Ltd will compensate warranty if:
- damage has taken place in normal operation condition
- instructions given by manufacturer have been followed
- repairing work has been carried out by a person authorized by Juko Ltd or an authorized dealer of Juko Ltd
- while repairing, original Juko spare parts have been used

VI A warranty claim
- all claims must be expressed to the dealer of the machine
- damaged parts must be delivered to the dealer at the same time
- a dealer will prepare a written warranty claim to the manufacturer and a damaged part must be sent to the manufacturer if requested
- a warranty claim must be done within 30 days after damage

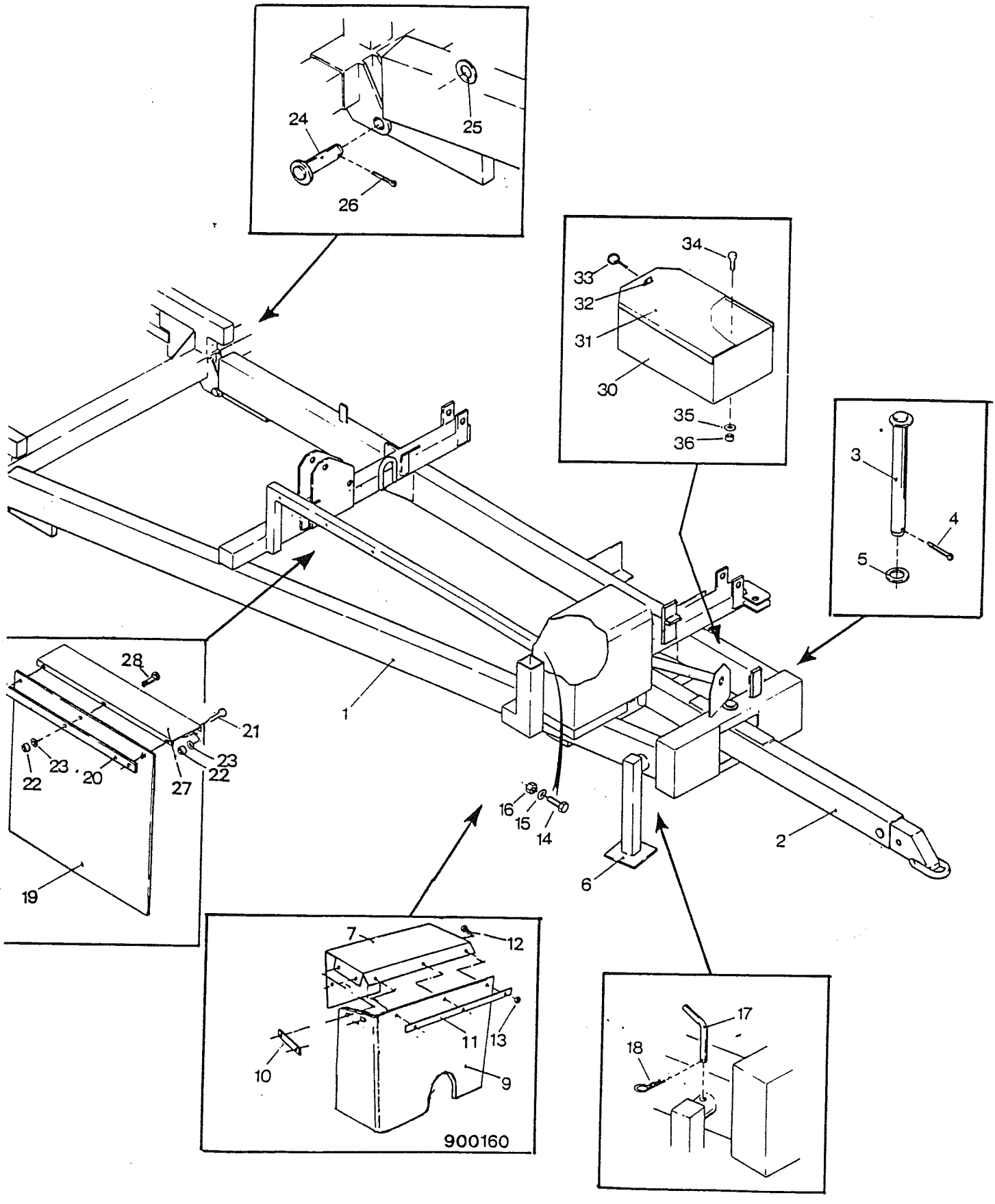
24
25
26
34
33
32
31
30
35
36
3
4
5
28
21
23
22
22
23
20
27
19
1
16
15
14
2
6
7
12
11
13
10
9
900160
17
18

JUKO 100 **From serial number 9Y-40501**

Item	Part no	FRAME	Qty/unit
1	95100	Main frame	1
2	950106	Drawbar	1
3	90250	Axle	1
4	30942	Cotter pin 10x56	1
5	30930	Washer 31,5x50x4	1
6	95108	Support leg	1
	900160	**GUARD, assy**	**1**
7	90160	Guard plate	1
9	90165	Rubber sheet	1
10	90166	Fixing bar	1
11	90167	Fixing bar	1
12	53363	Screw, hex M8x20	5
13	57550	Locking nut, hex M8	5
14	53363	Screw, hex M8x20	2
15	10350	Spring washer M8	2
16	10784	Washer M8	2
17	58123	Pin	1
18	57228	Spring clip	1
19	54149	Rubber sheet	1
20	54150	Backing plate	1
21	30252	Screw, hex M8x60	3
22	57550	Locking nut, hex M8	6
23	10784	Washer M8	6
24	87250	Axle pin	1
25	30930	Washer 31,5x50x4	1
26	30942	Cotter pin 10x56	1
27	90187	Bracket	1
28	53363	Screw, hex M8x20	3
x	89918	Electric box	1
x	89919	Lid	1
x	30957	Screw, hex M10x30	2
x	10760	Nut, hex M10	2
x	53363	Screw, hex M8x20	4
x	30261	Nut, locking M8	4

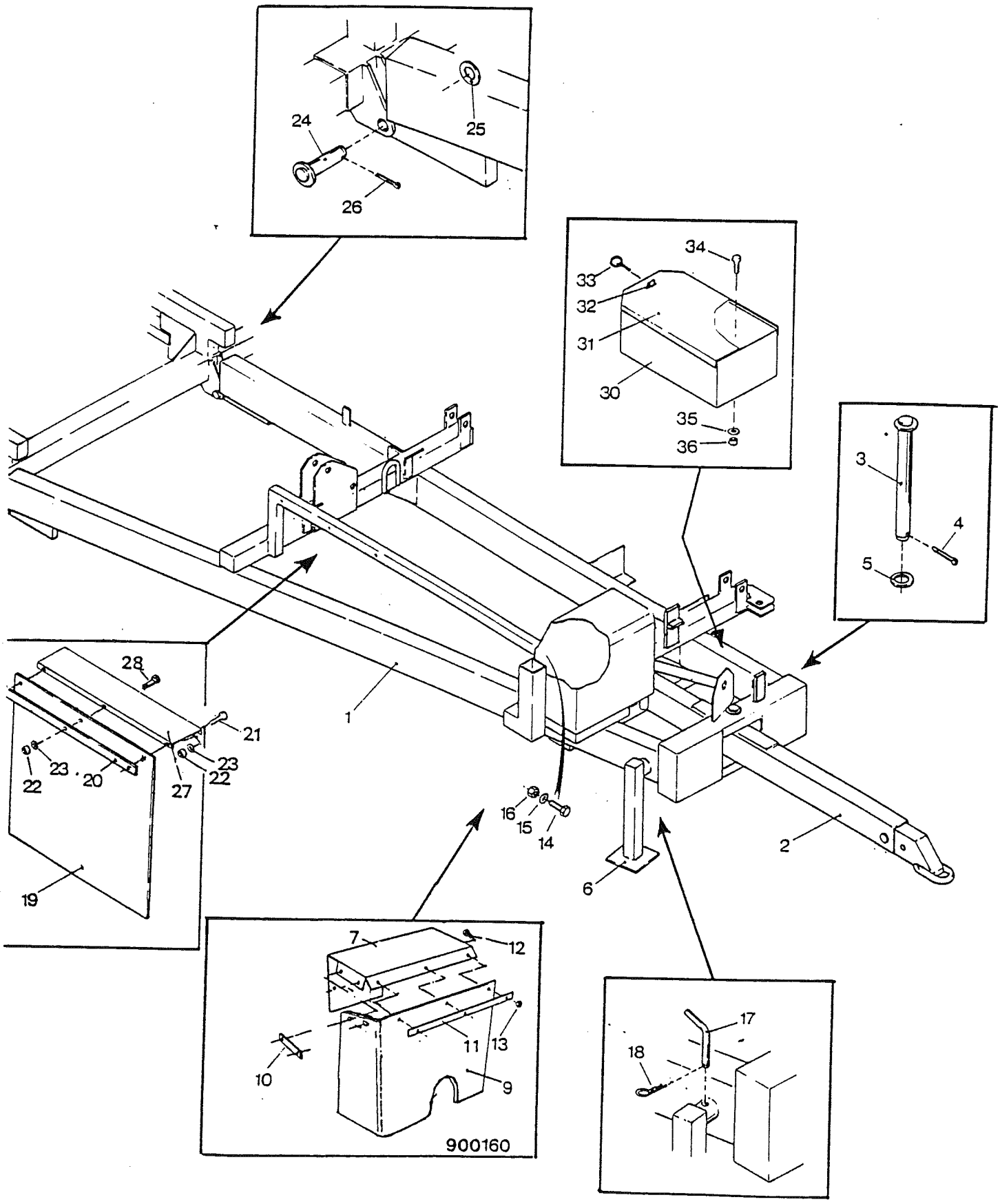
24
25
26
34
33
32
31
30
35
36
3
4
5
28
21
23
22
20
27
23
22
19
1
16
15
14
2
6
7
12
11
13
10
9
900160
17
18

Item	Part no	FRAME	Qty/unit
	530128	**TOOL BOX**	
30	53128	Tool box	1
31	53129	Lid	1
32	53129-01	Hinge pin	
33	40150	Linch pin D 9	1
34	30958	Screw, hex M10x25	2
35	10153	Spring washer M10	2
36	57379	Locking nut M10	2
	900149	**TOOL BOX, CONTENTS:**	
x		Fixing parts for tank extensions	
x	90908	Wedge tool for taking off sprockets	
x	30718	Linking piece 5/8x3/8	1
x	52336	Linking piece 3/4x7/16	
x	53351	Linking piece 5/8x3/8	1
x	53918	Linking piece 3/4x7/16	1
x	53766	Elevator link	1
x	58605	Bracket/remote control	1
x	30957	Screw, hex M10x30	1
x	30995	Wing nut M10	1
x	10760	Nut, hex M10	1
x	90263	Pin	2
x	95572	Topper knife	1
x	89718	Sprocket 23 T t=15,875	1

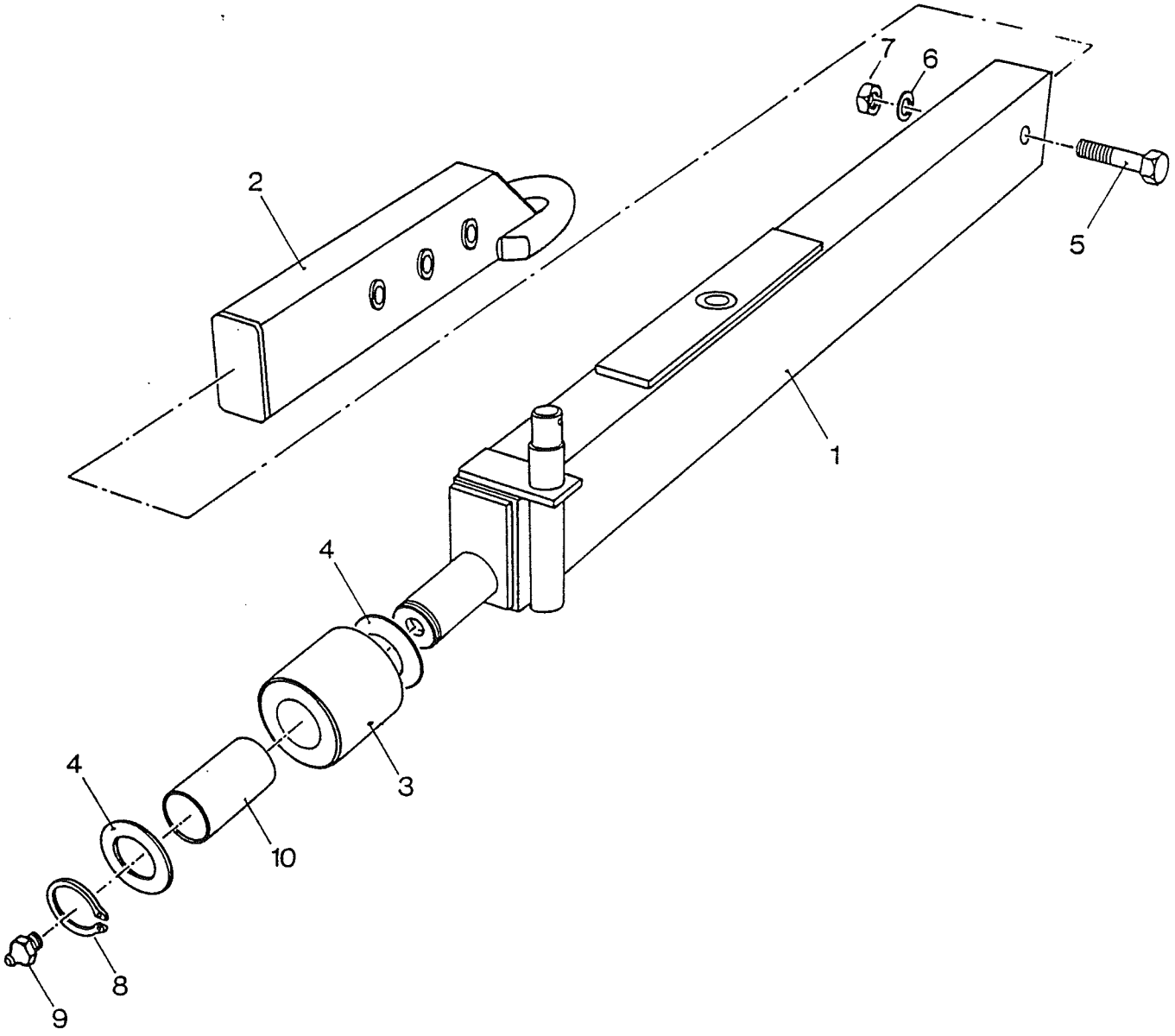
7
6
2
5
1
4
4
3
10
8
9

Item	Part no	FRAME	Qty/unit
	950106	**DRAWBAR, assy**	**1**
1	95106	Drawbar	1
2	58142	Drawbar extension	1
3	530175	Supporting roller	1
4	54103	Washer 50,5x75x3	2
5	53224	Screw, hex M20x100	1
6	53233	Spring washer M20	1
7	20645	Nut, hex M20	1
8	52343	Circlip A50x2	1
9	10761	Lubrication nipple M8	1
	530175	**SUPPORTING ROLLER, assy**	**1**
3	53174	Supporting roller	1
10	53175	Bearing bush	1

Item marked x not shown.

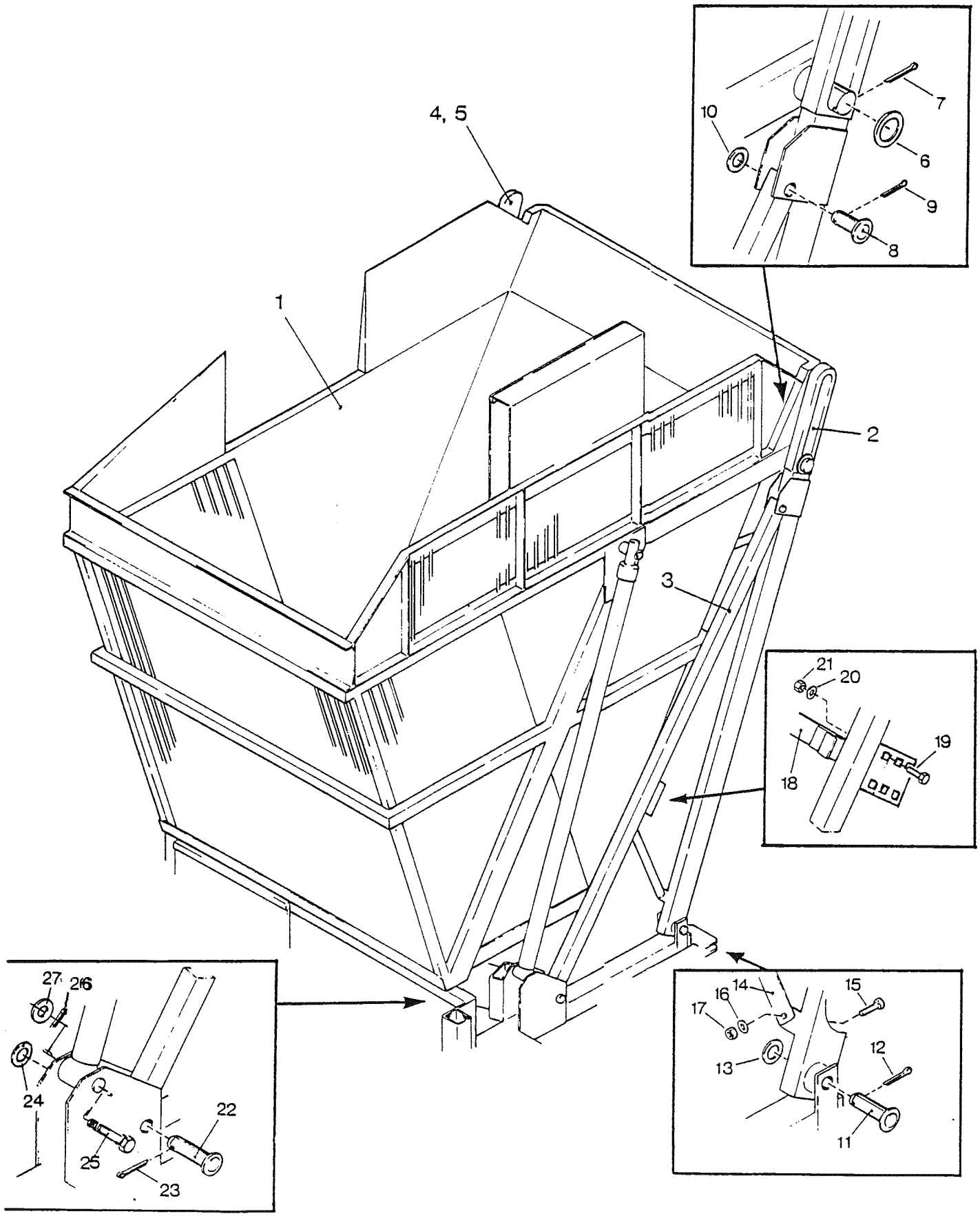
4, 5
1
2
3
10
7
6
9
8
21
20
19
18
27
26
24
22
25
23
14
16
17
15
13
12
11

JUKO 100 **From serial number 9Y-40501**

Item	Part no	TANK	Qty/unit
1	95200	Tank	1
2	95205	Tank support/front	1
3	95204	Brace/front	1
4	95206	Tank support/rear	1
5	95207	Brace/rear	1
6	90201	Washer 46x80x6	2
7	50123	Cotter pin 10x63	2
8	87253	Axle pin	2
9	57241	Cotter pin 6,3x45	2
10	30930	Washer 31,5x50x4	2
11	90251	Axle pin	2
12	57241	Cotter pin 6,3x45	2
13	30930	Washer 31,5x50x4	2
14	90207	Brace	2
x	95203	Sticker pad	1
15	30522	Screw, hex M12x35	4
16	10462	Washer M12	4
17	56448	Locking nut, hex M12	4
18	95208	Slide bar	1
19	57229	Lock screw M12x30	4
20	10634	Spring washer M12	4
21	30968	Nut, hex M12	4
22	90251	Axle nut	2
23	57241	Cotter pin 6,3x45	2
24	30930	Washer 31,5x50x4	2
x	95201	Rubber sheet	1
x	95202	Backing plate	2
x	30950	Lock screw M10x50	6
x	10607	Washer M10	6
x	57379	Locking nut, hex M10	6
x	90116	Cleaning iron	1
x	58368	Screw, hex M16x70	1
x	30124	Nut, hex M16	2
25	90255	Knuckle pin	2
26	57241	Split pin 6,3x45	2
27	30930	Washer 31,5x50x4	2

Item marked x not shown.

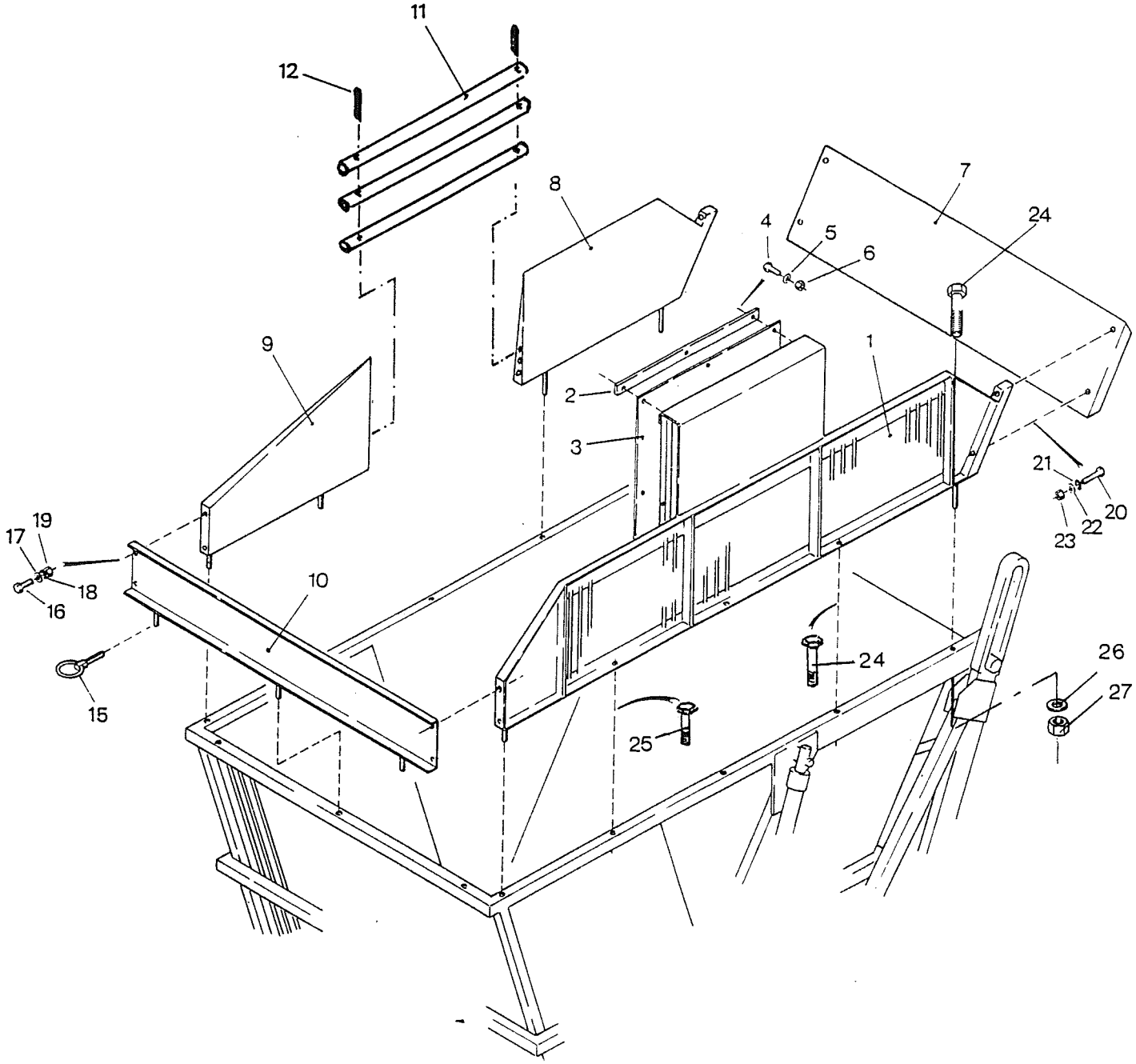
11
12
8
7
24
4
5
6
9
1
2
3
21
20
22
23
19
17
18
16
10
15
24
26
27
25

JUKO 100 **From serial number 9Y-40501**

Item	Part no	TANK	Qty/unit
	900220	**TANK EXTENSION, assy**	**1**
1	90220	Tank extension/front	1
2	54124	Backing plate/rubber sheet	1
3	54122	Rubber sheet	1
4	30958	Screw, hex M10x25	2
4	30947	Screw, hex M10x35	3
5	10607	Washer M10	5
6	57379	Locking nut M10	5
x	90213	Angle piece	1
7	90208	Extension/left	1
8	90211	Extension/left/back	1
9	90210	Extension/right/back	1
10	90212	Extension/right	1
		TOOL BOX, CONTENTS:	
13	40150	Linch pin D9	8
14	30949	Screw, hex M12x25	4
15	10634	Spring washer M12	4
16	53759	Washer 12,5x35x1,5	4
17	30968	Nut, hex M12	4
18	53158	Screw, hex M16x75	4
19	40151	Spring washer M16	4
20	30887	Washer M16	4
21	30124	Nut, hex M16	4
22	87325	Screw, hex M16x120	2
23	57158	Screw, hex M16x60	2
24	30887	Washer M16	4
25	30124	Nut, hex M16	4

Item marked x not shown

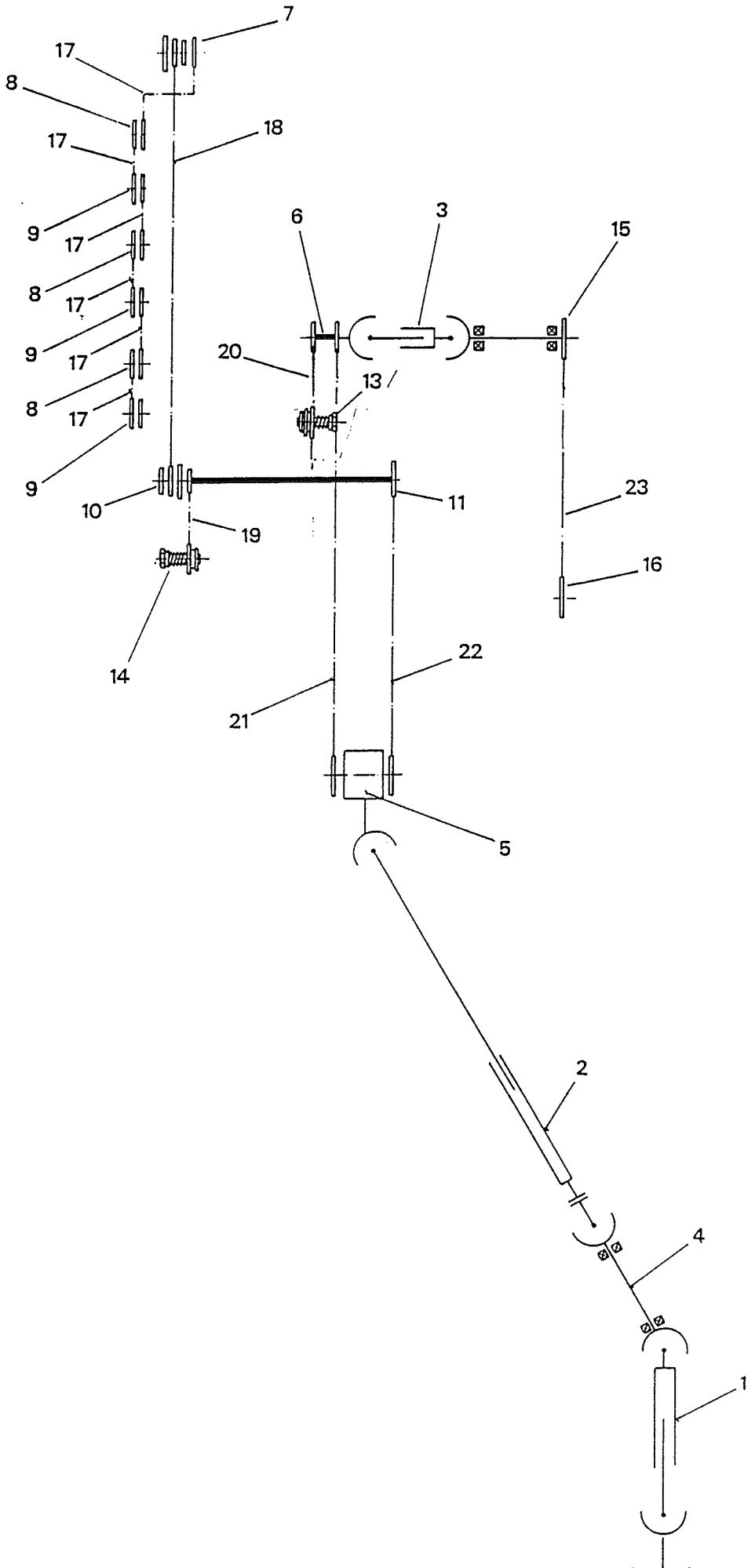
7
17
8
17
18
9
17
8
17
9
17
8
17
9
10
19
14
6
3
15
20
13
11
23
16
22
21
5
2
4
1

JUKO 100 **From serial number 9Y-40501**

Item	Part no	POWER TRANSMISSION CHART	Qty/unit
1	90333	P.T.O shaft Bond 102.111.F.007.007	1
		W2200-sd-1110.20.10.00-20.10.00	
2	90323	P.T.O shaft Bond 102.121 n 007.136.600 Nm	1
		W2200-sc15-1210..K32/600N,20.10..00-K32	
3	95307	P.T.O shaft Bond 201.030 n 034.034	1
		W2100-sc05-300.10.10.110-10.10-110	
4	90313	Intermediate shaft.....	1
5	950312	Gearbox.....	1
6	950649	Axle.....	1
7	90675	Sprocket 27/19/21/25 T, t=15,875/19,05.....	1
8	54659	Double sprocket 28/27 T, t=15,875.....	3
9	54658	Double sprocket 27/28 T, t=15,875.....	3
10	90674	Sprocket 19/27/25/21 T, t=19,05.....	1
11	90301	Sprocket 19 T, t=19.05.....	1
13	950611	Safety guard/upper elevator.....	1
14	950610	Safety guard/lower elevator.....	1
15	95724	Sprocket 28 T, t=15,875.....	1
16	90713	Sprocket 36 T, t=15,875.....	1
x	90908	Wedge tool for loosening sprockets.....	1
		(in tool box)	
17		Roller chain 5/8x3/8x49 l.	6
18		Roller chain 3/4x7/16x156 l.	1
19		Roller chain 3/4x7/16x64 l.	1
20		Roller chain 3/4x7/16x40 l.	1
21		Roller chain 3/4x7/16x134 l.	1
22		Roller chain 3/4x7/16x111 l.	1
23		Roller chain 5/8x3/8x192 l.	1
24	89717	Safety guard.....	1

Item marked x not shown.

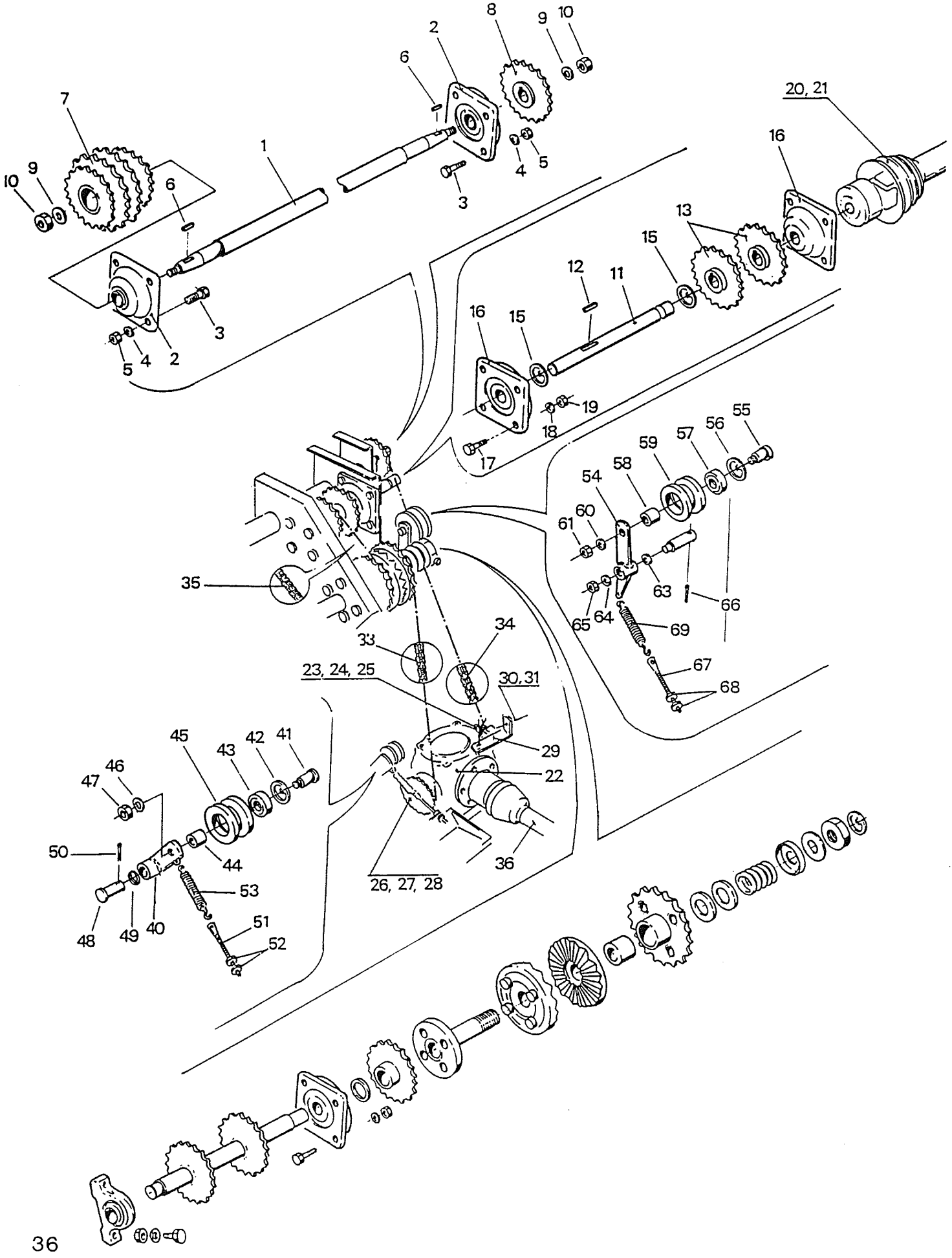
1
2
3
4
5
6
7
8
9
10
11
12
13
15
16
17
18
19
20, 21
23, 24, 25
26, 27, 28
29
30, 31
33
34
35
36
40
41
42
43
44
45
46
47
48
49
50
51
52
53
54
55
56
57
58
59
60
61
63
64
65
66
67
68
69

JUKO 100 **From serial number 9Y-40501**

Item	Part no	POWER TRANSMISSION CHART	Qty/unit
1	90652	Main power transmission shaft	1
2	57185	Flange bearing FY 30 TF	1
3	30957	Screw, hex M10x30	4
x	20561	Screw, hex M10x40	4
4	10607	Washer M10	8
5	57379	Locking nut M10	8
6		Key 5x5x37	2
7	90674	Sprocket 19/27/25/21 T	1
8	90301	Sprocket 19 T, t=19,05	1
9	53942	Washer M20	2
10	20645	Nut, hex M20	2
	950649	**AXLE, assy**	**1**
11	90660	Axle	1
12		Key 8x7x50	1
13	95648	Sprocket 22 T, t=19.05	2
15	57235	Flange bearing FY 30 TF	2
x	95650	Ring	1
x	20406	Washer 30x40x2	1
17	30947	Screw, hex M10x35	8
18	10607	Washer M10	8
19	57379	Locking nut M10	8
20		Key 8x7x40	2
21	95307	P.T.O shaft Bond 201.030 n.O34.034 W2100-sc05-300.10.10.110-1010-100	1
	950312	**GEARBOX, assy**	**1**
22	95312	Gearbox, angle Comer T312A	1
x	95317	Screw, hex M16x30 12.9	4
x	40151	Spring washer M16	4
23	95314	Sprocket Z=19 t=19,05	1
24		Key 12x8x27	1
25	57462	Set screw M8x10	1
26	95313	Sprocket Z=19 t=19,05	1
27		Key 12x8x20	1
28	30321	Set screw M8x12	1
29	95191	Backing plate	1
x	63135	Screw, hex M16x25	1
x	30887	Washer M16	1
30	30951	Screw, hex M10x16	1
31	10607	Washer M10	1
33		Roller chain 3/4x7/16x134 l	1
34		Roller chain 3/4x7/16x111 l	1
35		Roller chain 3/4x7/16x40 l	1
36	90323	P.T.O. shaft Bond 102.121n 007.136.600 Nm W2200-sc15-1210.K32/600N,20.10.00-K32	1

Item marked x not shown.

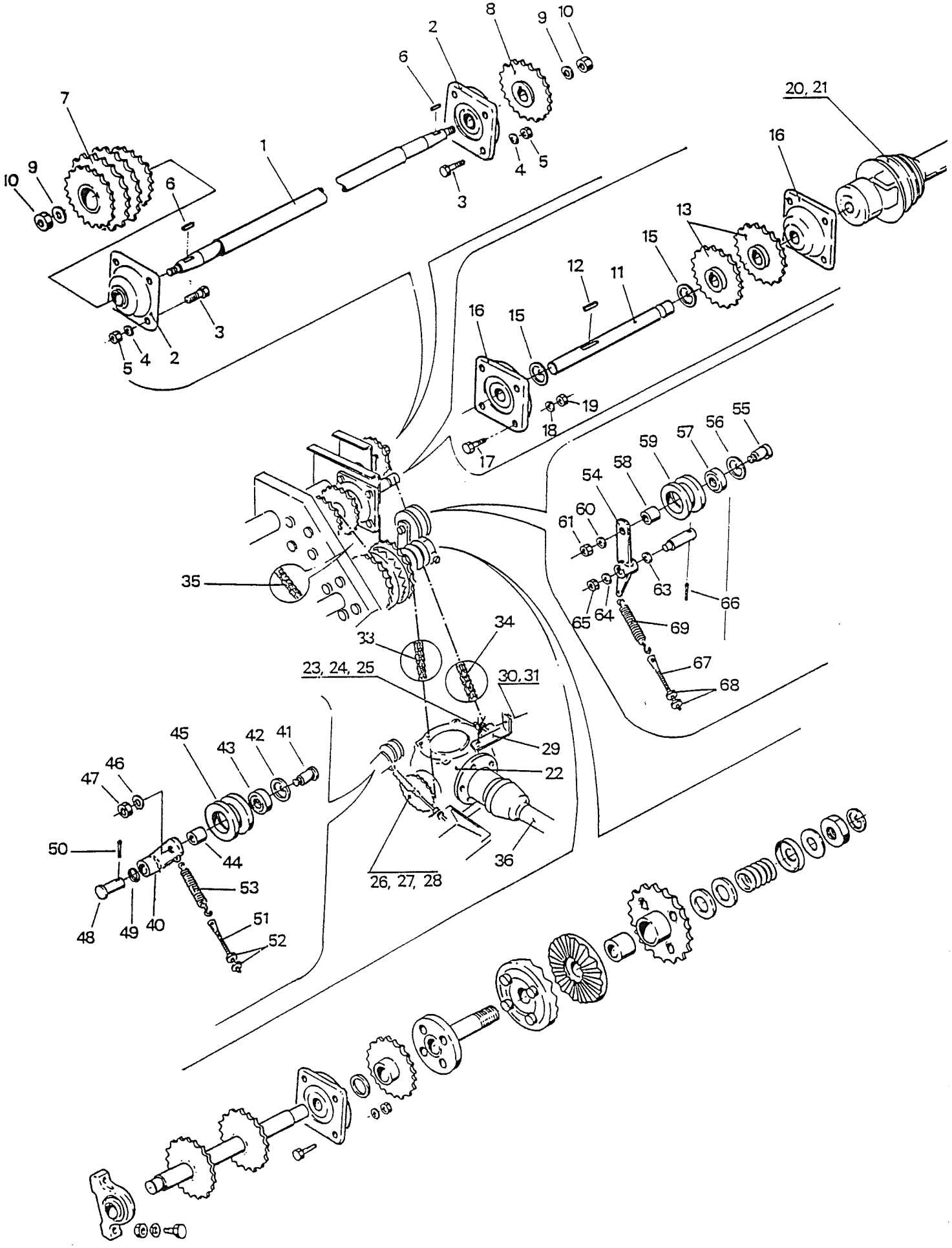
1
2
3
4
5
6
7
8
9
10
11
12
13
15
16
17
18
19
20, 21
23, 24, 25
26, 27, 28
29
30, 31
33
34
35
36
40
41
42
43
44
45
46
47
48
49
50
51
52
53
54
55
56
57
58
59
60
61
63
64
65
66
67
68
69

Item	Part no	POWER TRANSMISSION	Qty/unit
	860636	**CHAIN TIGHTENER, assy**	1
40	57594	Shaft	1
41	57595	Axle	1
42	53424	Circlip J47x1,47	1
43	63223	Ball bearing 6204-2RS	1
44	57564	Tube	1
45	57563	Roller	1
46	40151	Spring washer M16	1
47	30124	Nut, hex M16	1
48	42116	Knuckle pin	1
49	52424	Washer 20,5x30x2	1
50	53463	Cotter pin 4x40	1
51	57445	Adjusting screw	1
52	10760	Nut, hex M10	2
53	60176	Tension spring	1
	540583	**CHAIN TIGHTENER, assy**	1
54	54583	Lever	1
55	57595	Axle	1
56	53424	Circlip J47x1,75	1
57	63223	Ball bearing 6204-2RS	1
58	57564	Tube	1
59	57563	Roller	1
60	40151	Spring washer M16	1
61	30124	Nut, hex M16	1
63	57214	Ring	1
64	40151	Spring washer M16	1
65	30124	Nut, hex M16	1
66	10624	Cotter pin 5x40	1
67	57445	Adjusting screw	1
68	10760	Nut, hex M10	2
69	53276	Tension spring	1

Item marked x not shown.

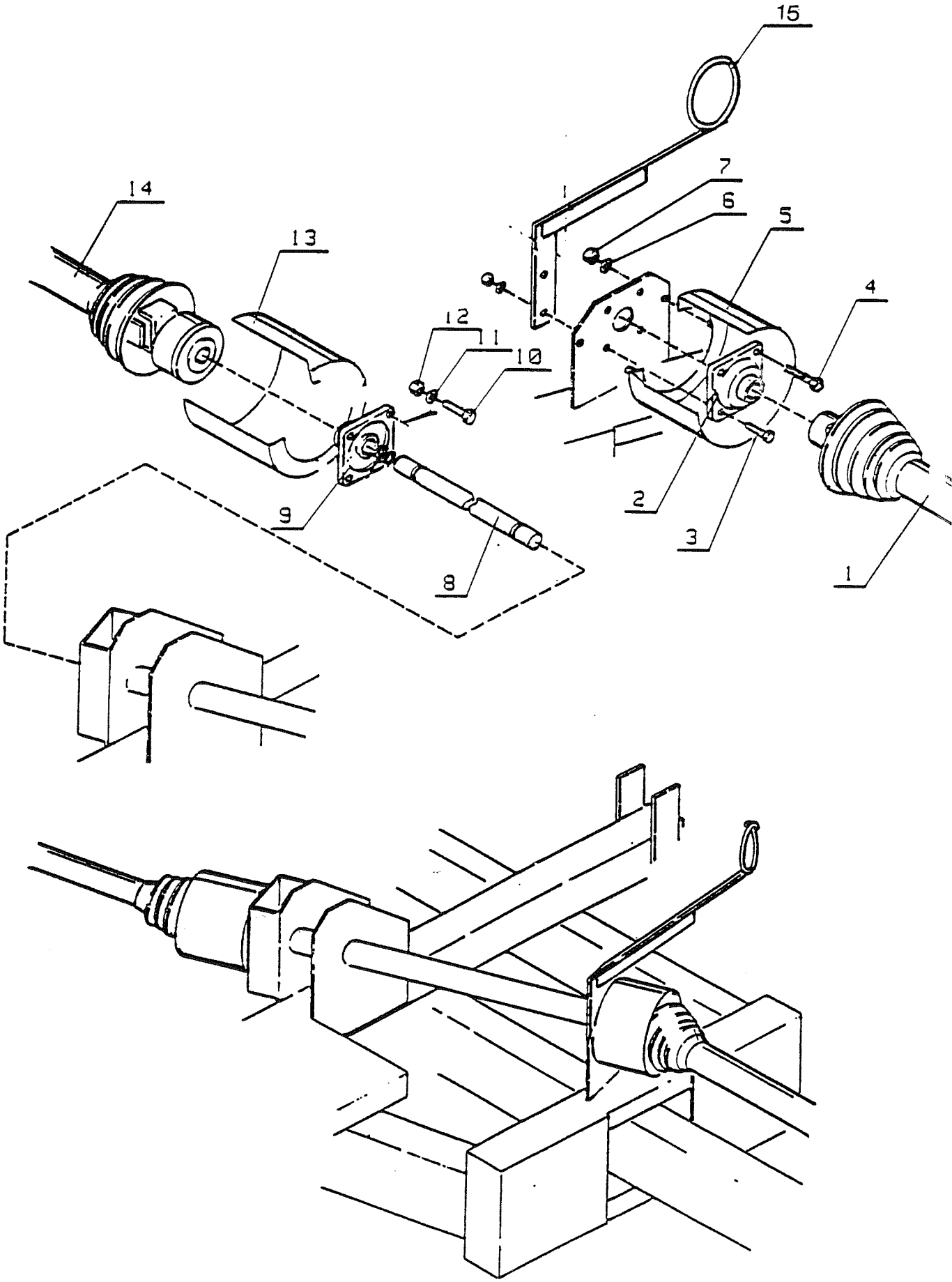
15
14
13
7
6
5
4
12
11
10
9
8
2
3
1

JUKO 100 **From serial number** **9Y-40501**

Item	Part no	**POWER TRANSMISSION**	Qty/unit
1	90333	P.T.O. shaft W2200-SD15-1110.20.10.00/20.10... Bond 102.111.F.007.007	1
2	57186	Flange bearing FY35TF	1
3	30959	Screw, hex M12x40	2
4	30522	Screw, hex M12x35	2
5	68827	Guard	1
6	10462	Washer M12	4
7	56448	Locking nut M12	4
8	90313	Intermediate shaft	1
9	57186	Flange bearing FY35TF	1
10	30522	Screw, hex M12x35	4
11	10462	Washer M12	4
12	56448	Locking nut M12	4
13	68827	Guard	1
14	90323	P.T.O. shaft	1
15	90102	Support	1

Item marked x not shown.

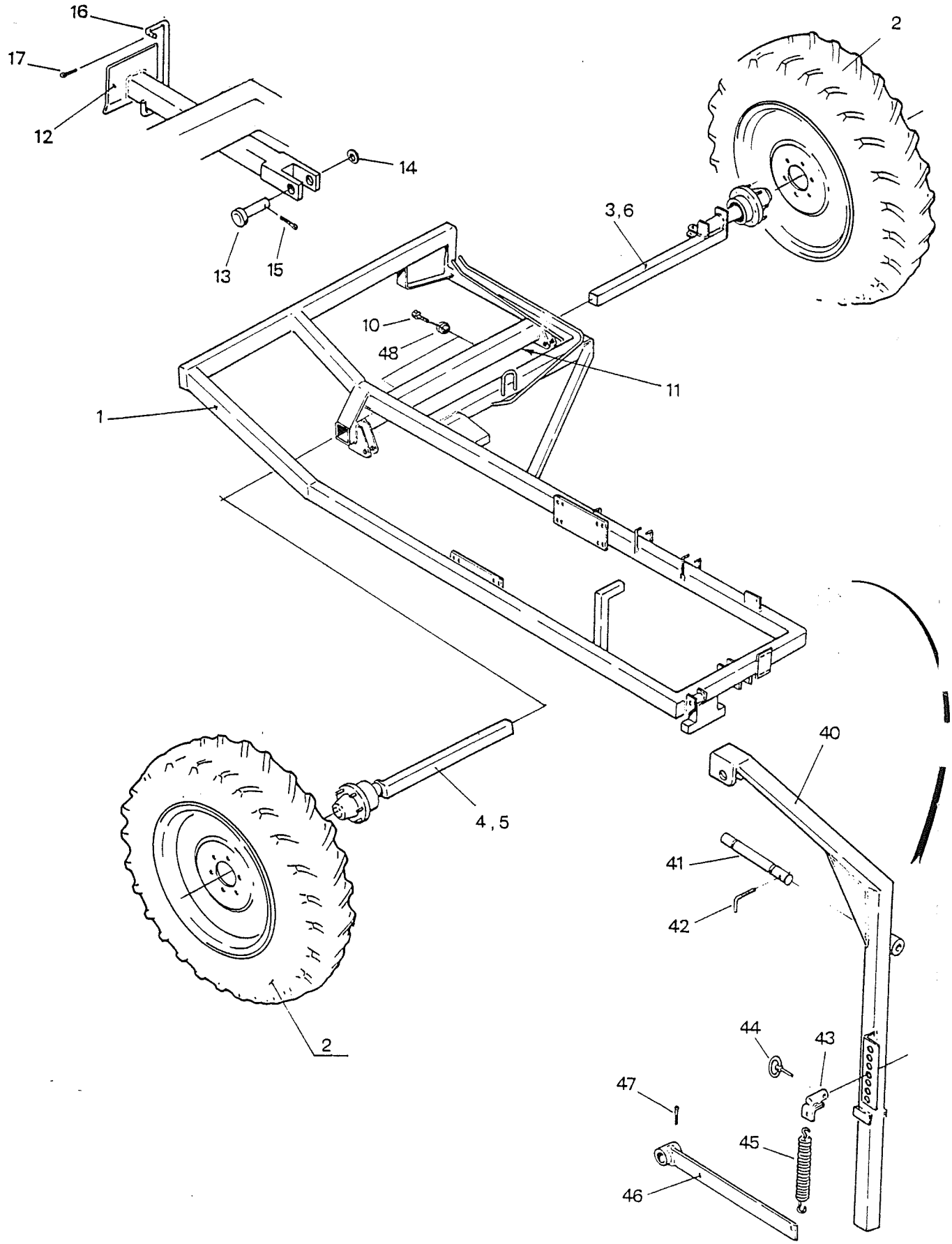
16
17
12
14
13
15
2
3,6
10
48
11
1
4,5
40
41
42
2
44
43
47
45
46

JUKO 100 **From serial number 9Y-40501**

Item	Part no	LIFTING FRAME	Qty/unit
1	95400	Lifting frame	1
2	**950402**	**WHEEL 12.4-24 8TR**	**2**
3	95426	Axle/left	1
4	95404	Axle/right	1
2	**950965**	**WHEEL, right 500/60x22.5“**	**1**
5	95404	Axle	1
2	**950966**	**WHEEL, left 13.6x38“**	**1**
6	95427	Axle	1
x	53227	Screw, hex M 16x50	2
10	53227	Screw, hex M16x50	5
x	30124	Nut, hex M16	5
11	10761	Lubrication nipple M8	2
12	95107	Support leg	1
13	90257	Axle pin	1
14	56625	Washer 25,5x35x2	1
15	57241	Cotter pin 6,3x45	1
16	53289	Support hook	1
17	10652	Cotter pin 3,2x25	1
40	95406	Bracket	1
41	86130	Restricting pin	1
42	57360	Locking screw	1
43	90403	Bracket/spring	1
44	40150	Linch pin D9	1
45	53267	Tension spring	1
46	90402	Lever/spring	1
47	10459	Cotter pin 5x32	1
48	30124	Nut, hex M16	7

Item marked x not shown.

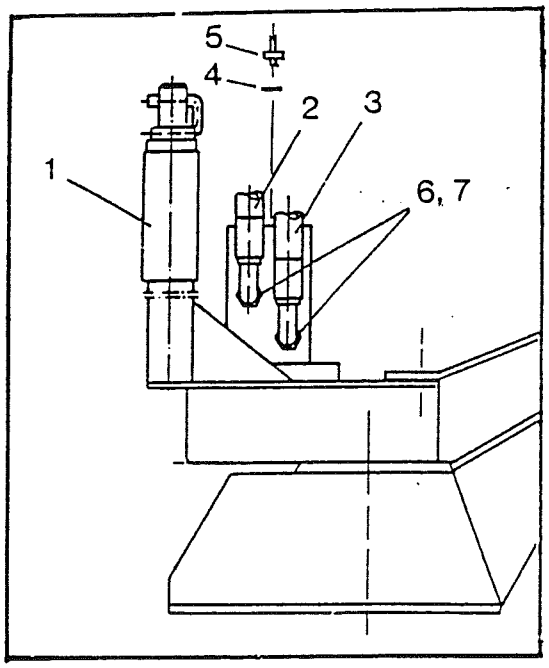
5
4
2
3
1
6, 7

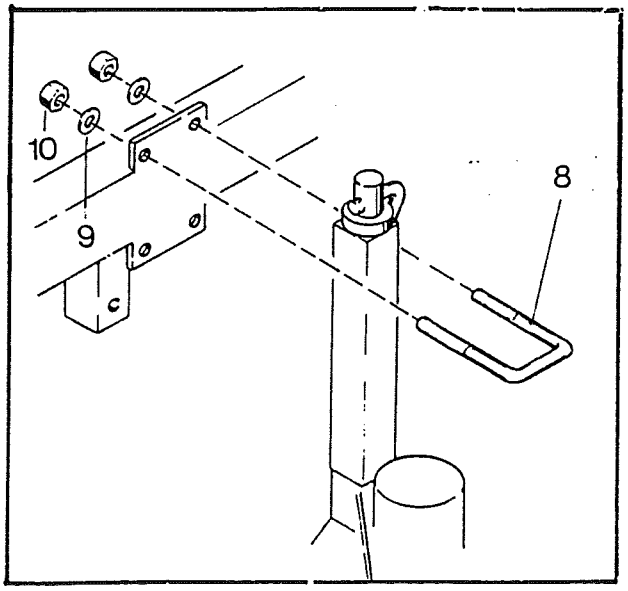
10
9
8

JUKO 100 **From serial number 9Y-40501**

Item	Part no	**HYDRAULIC PRETOPPER**	Qty/unit
1	950550	Pretopper	1
2	59881	Pressure hose L=2500 ½"	1
3	87824	Pressure hose L=900 ½"	1
4	87830	Seal Usit 13.7x20.6x2	1
5	90820	Adaptor R 1/4 / R 1/4"	1
6	54826	Adaptor R 1/2 / R ½"	2
7	52361	Seal Usit 21.5x28.6x2	2
8	10776	U-bolt M10x215	2
9	10607	Washer M10	4
10	57379	Locking nut M10	4

Item marked x not shown.

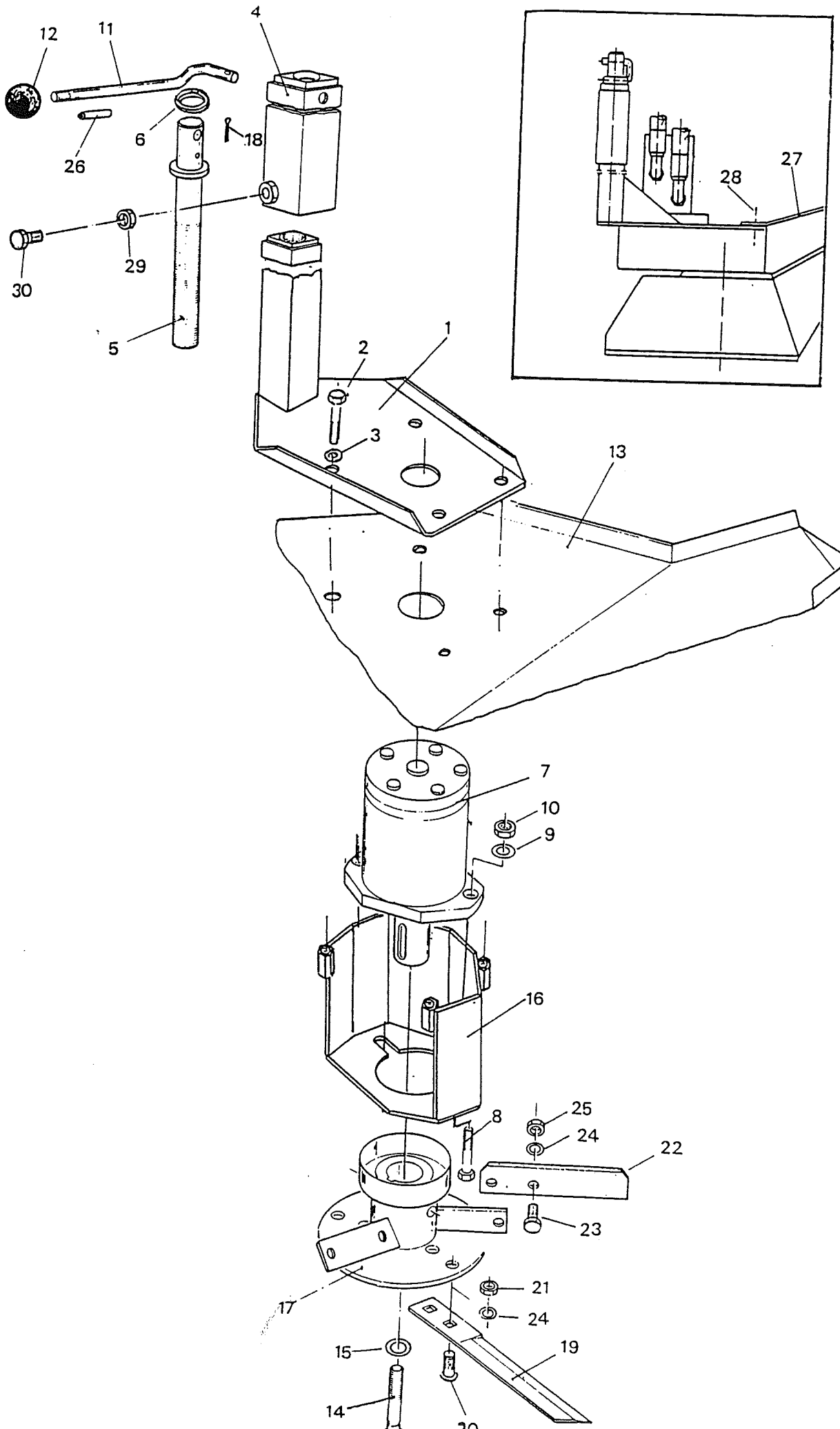
12
11
4
6
18
26
29
30
5
1
2
3
13
27
28
7
10
9
16
8
25
24
22
23
21
24
19
17
15
14
20

Item	Part no	HYDRAULIC PRETOPPER	Qty/unit
	950550	**PRETOPPER, assy**	**1**
1	95551	Frame, pretopper	1
2	30958	Screw, hex M10x25	4
3	10607	Spring washer M10	4
4	59894	Tube	1
5	56647	Adjusting screw	1
6	56642	Bush	1
7	95552	Hydraulic motor OMP25	1
8	30959	Screw, hex M12x40	2
9	10634	Spring washer M12	2
10	30968	Nut, hex M12	2
11	30558	Crank	1
12	20726	Knob	1
13	95553	Guard	1
x	90568	Rubber sheet	1
x	13235	Rivet 4,8x14	17
14	53363	Screw, hex M8x20	1
15	20554	Washer 10x30x2	2
16	95550	Housing/gear	1
17	95554	Knife disc	1
18	10463	Cotter pin 3,2x16	1
19	90566	Knife	3
20	87314	Screw, hex M10x3n 10.9	6
21	57379	Locking nut M10	6
22	95555	Rubber flap	3
x	87594	Washer	3
23	57539	Lock screw M10x30	6
24	10153	Spring washer M10	6
25	10760	Nut, hex M10	6
26	31531	Roll pin 5x35	1
27	95556	Bracket	1
x	57535	Screw, hex M8x16	1
x	10784	Washer M8	1
x	30969	Nut, hex M8	1
28	53409	Screw, hex M8x30	1
29	30124	Nut, hex M16	1
30	30945	Screw, hex M16x35	1

Item marked x not shown.

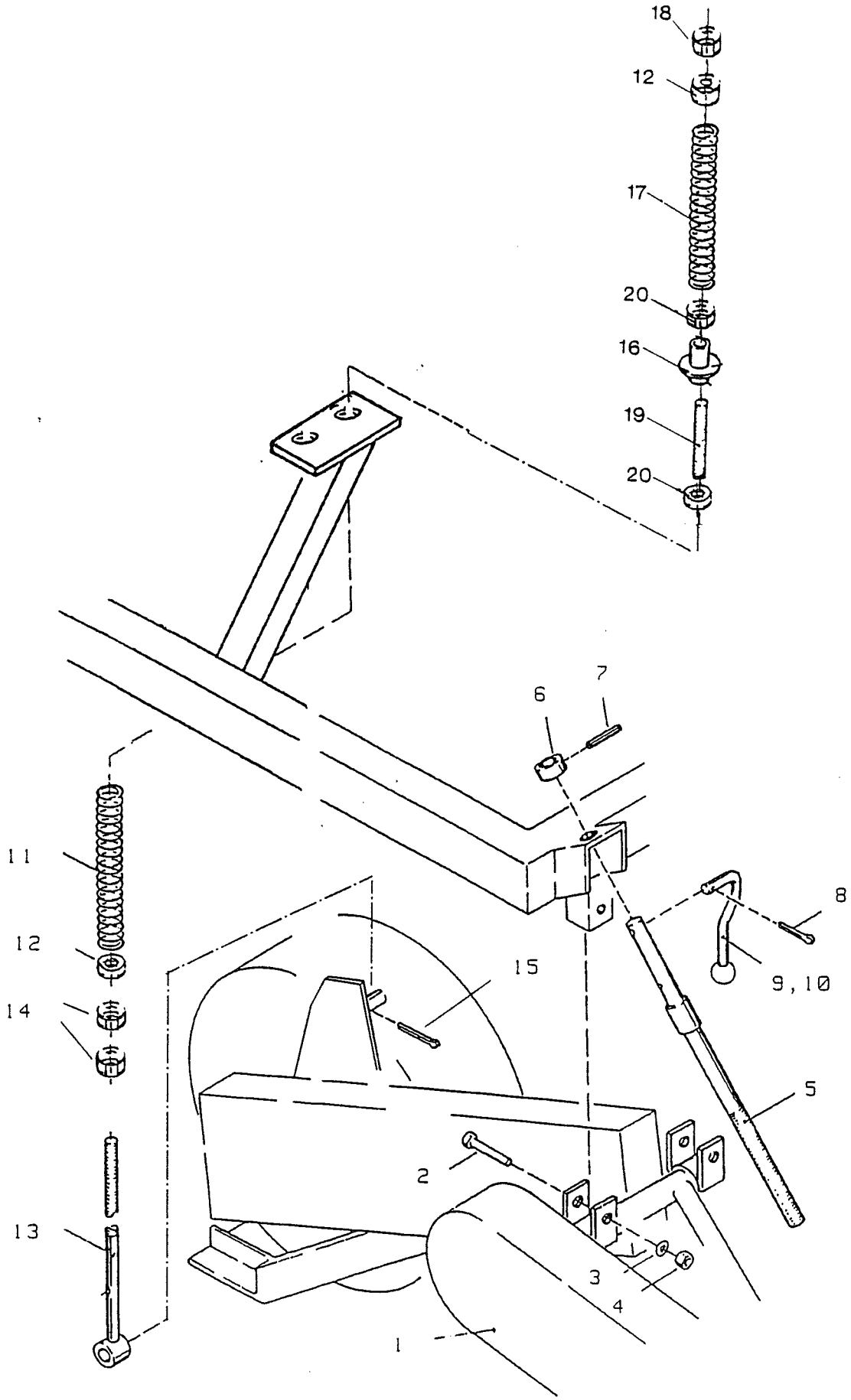
18
12
17
20
16
19
20
7
6
11
12
14
15
8
9, 10
5
2
13
3
4
1

JUKO 100 **From serial number 9Y-40501**

Item	Part no	**TOPPING UNIT**	Qty/unit
1	950500	Topping unit	1
2	53953	Screw, hex M10x70	2
3	10607	Washer M10	2
4	57379	Locking nut M10	2
5	90512	Adjusting screw	2
6	12103	Restricting bush	1
7	31531	Roll pin 5x36	1
8	10463	Cotter pin 3,2x16	1
	620201	**CRANK, assy**	**1**
9	30558	Crank	1
10	20726	Knob	1
11	90513	Pressure spring	1
12	95561	Bush	1
13	95559	Adjusting screw	1
14	30124	Nut, hex M16	2
15	10652	Cotter pin 3,2x25	1
16	95562	Bush	1
17	95560	Spring	1
18	53190	Nut, locking M16	1
19	95569	Tube	1
20	95570	Nut M16	2

Item marked x not shown.

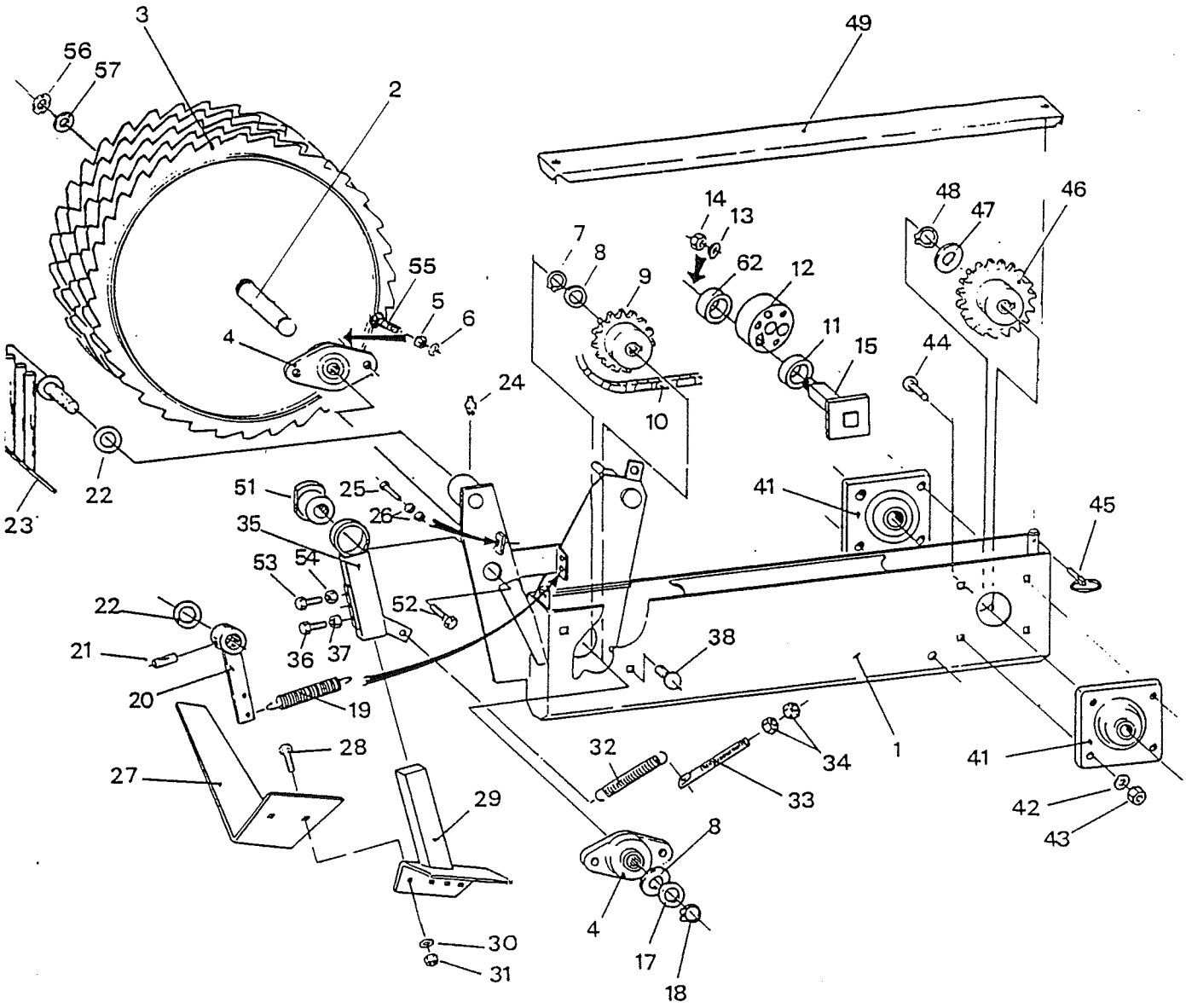
3
56
57
2
49
14
13
48
47
46
7
8
9
62
12
55
5
6
4
11
15
44
24
10
22
23
51
25
26
41
45
35
53
54
52
22
21
36
37
38
20
19
28
27
32
34
1
41
33
29
42
43
8
4
30
31
17
18

Item	Part no	TOPPING UNIT, rear part	Qty/unit
	950500	**TOPPING UNIT, assy**	
1	87526	Frame, topping unit	1
2	95568	Axle	1
3	95566	Feeler wheel, open end	1
3	95567	Feeler wheel, closed end	1
x		Key 8x7-170	1
x		Key 8x7x32	4
4	57187	Collar step bearing TB25TF	2
5	57379	Locking nut M10	4
6	10153	Spring washer M10	4
7	53378	Circlip A25x2	1
8	10572	Washer 25,5x35x0,75	2
9	53633	Sprocket Z=17, t=15.875	1
10	95564	Roller chain 5/8x3/8x96 l	1
11	87520	Ring	1
12	31930	Chain tightener	1
13	10462	Washer M12	1
14	30968	Nut, hex M12	1
15	87519	Axle	1
17	56625	Washer 25,5x35x2	2
18	53378	Circlip A25x2	1
19	53276	Tension spring	1
20	90516	Lever	1
21	12238	Roll pin 5x32	1
22	56625	Washer 25,5x35x2	2
23	90533	Cleaner	1
24	30263	Lubrication nipple M6	1
25	42527	Screw, hex M10x40	1
26	10760	Nut, hex M10	2
27	95572	Topping knife	1
28	57539	Lock screw M10x30	2
29	87517	Arm/topping knife	1
30	10153	Spring washer M10	2
31	10760	Nut, hex M10	2
32	63624	Tension spring	1
33	87516	Adjusting screw	1
34	10760	Nut, hex M10	2
35	87518	Tube	1
x	95557	Locking washer	1
x	87593	Slide bearing Wolf ZX-100GT45	1
36	30522	Screw, hex M12x35	2
37	30968	Nut, hex M12	2
38	57539	Lock screw M10x30	2

Item marked x not shown.

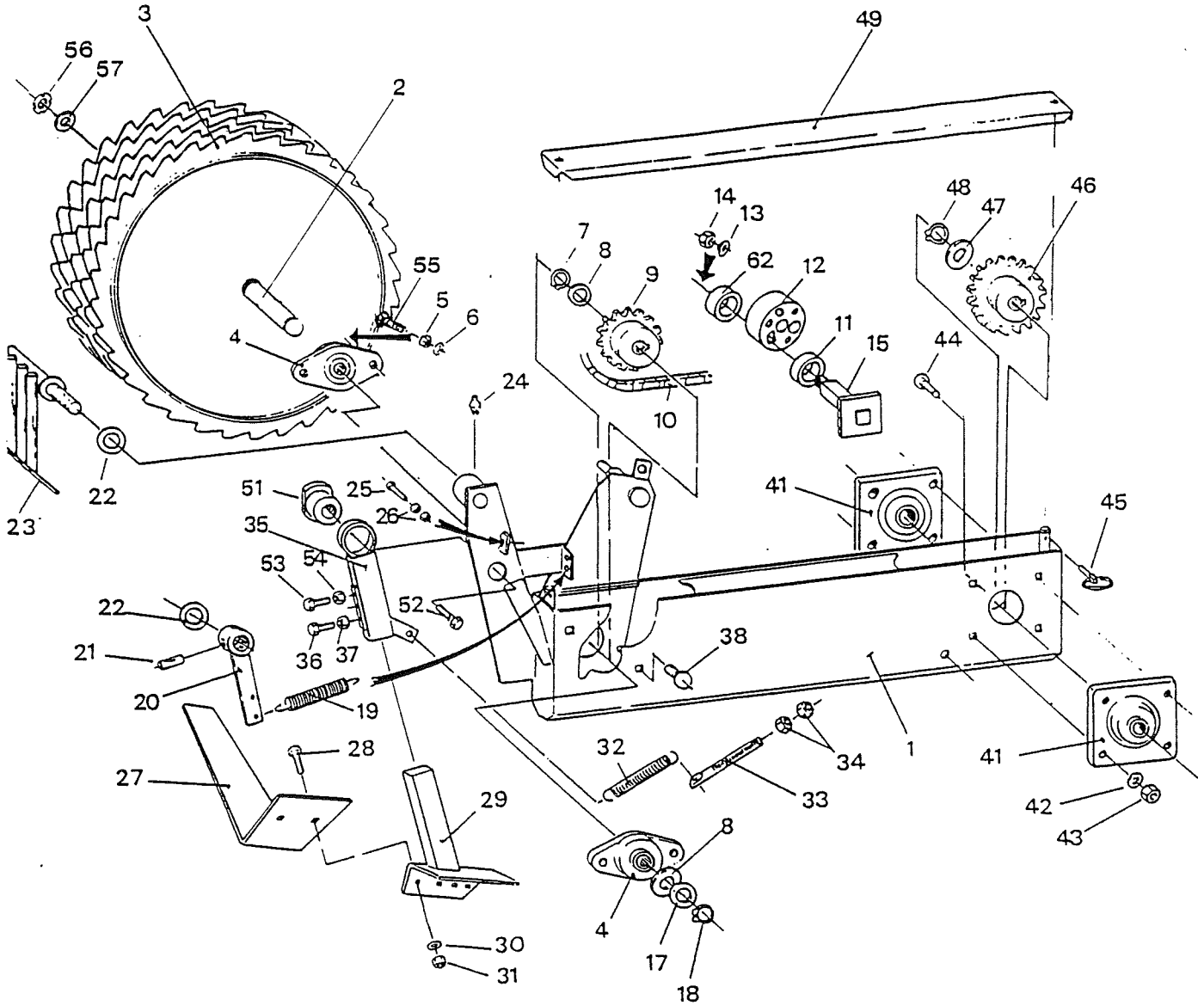
3
56
57
2
49
55
5
6
4
14
13
7
8
9
62
12
48
47
46
11
15
44
24
10
22
23
51
25
26
35
53
54
52
41
45
22
21
20
19
36
37
38
28
27
29
32
34
33
1
41
42
43
8
4
17
18
30
31

Item	Part no	TOPPING UNIT, rear part	Qty/unit
41	57185	Collar step bearing FY30TF	2
42	10153	Spring washer M10	8
x	10462	Washer M12	8
43	57379	Locking nut M10.	8
44	57539	Lock screw M10x30	8
45	40150	Linch pin D9	2
46	87595	Sprocket Z=23 t=15.875	1
47	20406	Washer 30x40x2	1
48	20407	Circlip A30x1,5	1
49	87542	Lid	1
50	87549	Ring	1
51	87585	Axle	1
52	30982	Screw, hex M16x40	1
53	54534	Screw, hex M16x120	1
54	30124	Nut, hex M16	1
55	58835	Lock screw M10x40	2
56	10847	Axle nut KM6	1
57	10848	Locking washer MB6	1

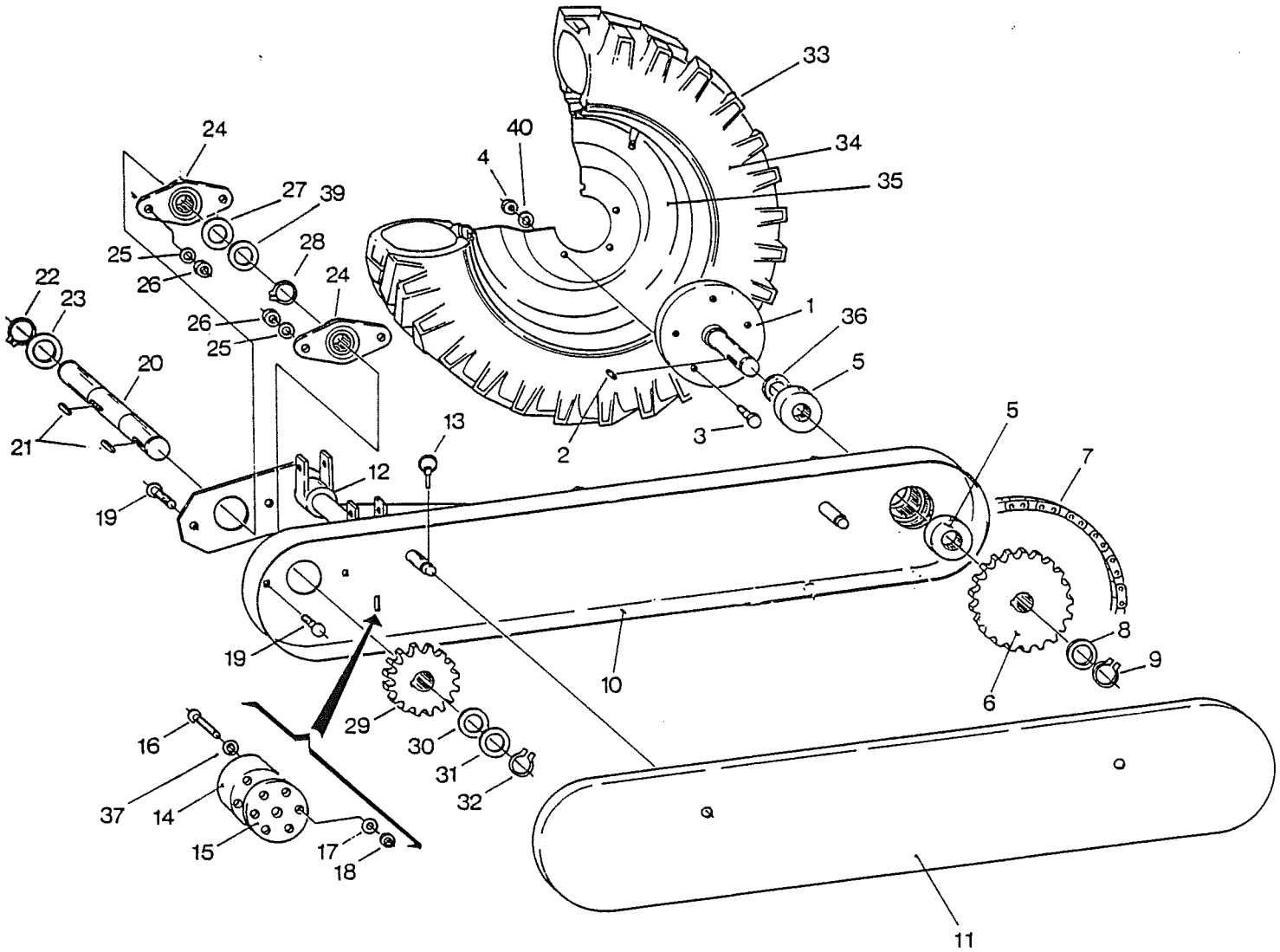
33
34
35
40
4
24
27
39
28
25
26
24
22
23
26
25
20
21
1
36
5
3
2
13
12
19
5
7
19
10
8
9
6
29
30
31
32
16
37
14
15
17
18
11

JUKO 100 **From serial number 9Y-40501**

Item	Part no	**TOPPING UNIT, front part**	Qty/unit
	950500...		
1	95507	Wheel axle	1
x	30263	Lubrication nipple M6	1
2		Key 8x7x32	1
3	30522	Screw, hex M12x35	4
4	30968	Nut M12	4
5	57237	Ball bearing 6206Z	2
6	95506	Sprocket Z=24 t=19.05	1
7	95563	Roller chain 3/4x7/16x103 l.	1
8	20406	Washer 30x40x2	1
9	20407	Circlip A30x1,5	1
10	95500	Frame/wheel	1
11	95501	Guard	1
12	30265	Lubrication nipple M6, angle	2
13	40150	Linch pin D9	2
14	31261	Chain tightener L=28	1
15	31263	Chain tightener L=16	1
16	30960	Lock screw M10x60	1
17	10607	Washer M10	1
18	10760	Nut, hex M10	1
19	30957	Screw, hex M10x30	2
20	95510	Axle	1
21		Key 8x7x32	2
22	20407	Circlip A30x1,5	1
23	20406	Washer 30x40x2	1
24	67118	Collar step bearing FY TB 30 TF	2
25	10607	Washer M10	4
26	57379	Locking nut M10	4
27	20406	Washer 30x40x2	1
28	20407	Circlip A30x1,5	1
29	54314	Sprocket Z=16 t=19,05	1
30	54336	Washer 30,5x40x1	1
31	20406	Washer 30x40x2	1
32	20407	Circlip A30x1,5	1
	950503	**WHEEL, assy**	
33	95503	Tyre 5.5x15.00 4PR Dunlop	1
34	95504	Tube 5.0x15.00	1
35	95505	Rim 4Jx15	1
36	87512	Bush	1
37	10462	Washer M12	1
38	57539	Lock screw M10x30	2
x	10462	Washer M12	4
39	54336	Washer 30,5x40x1	1
40	42944	Angle washer M12	4

Item marked x not shown.

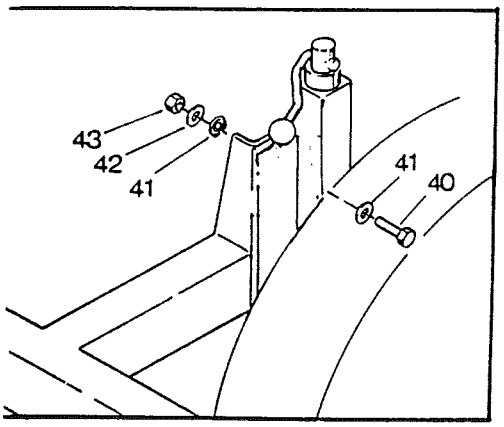
43
42
41
41
40

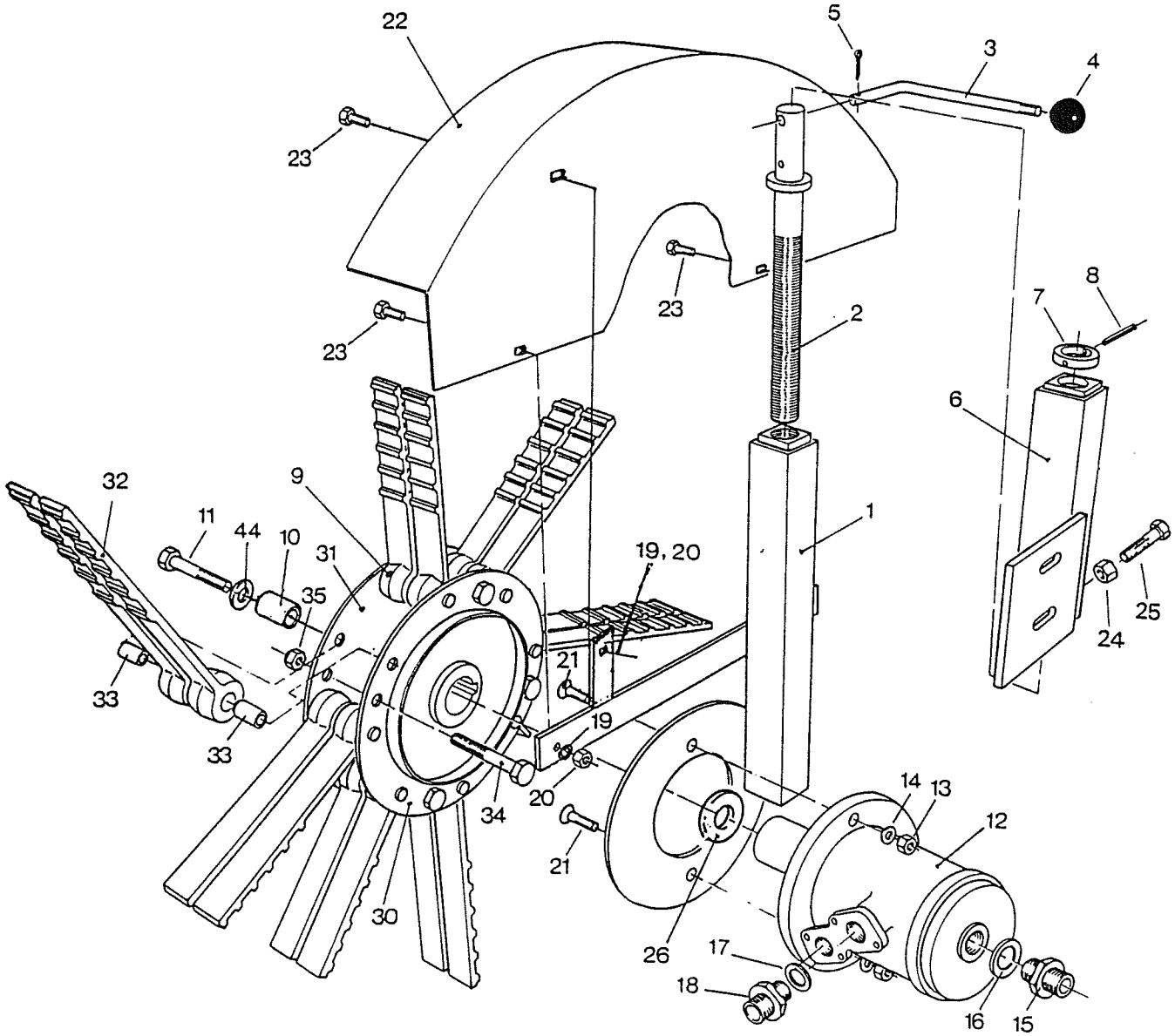
22
5
3
4
23
23
23
2
8
7
6
32
9
11
44
10
31
35
19, 20
1
25
24
21
33
33
19
20
34
21
14
13
12
30
26
17
18
16
15

Item	Part no	HYDRAULIC FLIPPER UNIT	Qty/unit
	900518	**HYDRAULIC FLIPPER UNIT, assy**	
1	54911	Frame tube	1
2	56647	Adjusting screw	1
3	30558	Crank	1
4	20726	Knob	1
5	10463	Cotter pin 3,2x16	1
6	90518	Frame tube	1
7	56642	Restricting bush	1
8	31531	Roll pin 5x35	1
9	540913	Flipper unit	1
10	90567	Bush D21,3x2,65x40	1
11	58811	Screw, hex M8x70	1
12	25121	Hydraulic motor Danfoss OMP 50	1
13	56448	Locking nut M12	2
14	10462	Washer M12	2
15	90820	Adaptor, male/male R 1/4/R 1/4	1
16	90821	Seal Al 14x16x1,5	1
17	52360	Seal Al 20x28x1,5	2
18	57648	Adaptor, male/male R 1/2	2
19	10350	Spring washer M8	3
20	30969	Nut, hex M8	3
21	66137	Slotted countersunk head screw M12x40	2
22	54912	Guard	1
23	57536	Lock screw M18x20	3
24	30124	Nut, hex M16	1
25	30982	Screw, hex. M16x40	1
26	52141	Washer 25,5x45x3	1
	540913	**FLIPPER UNIT, assy**	
30	90562	Hub	1
31	90563	Flange	1
32	66186	Plastic flail	16
33	66198	Plastic bearing	16
34	95565	Lock screw M10x80	4
35	57379	Locking nut M10	4
40	30522	Screw, hex M 12x35	2
41	10462	Washer M12	2
42	10634	Spring washer M12	2
43	30968	Nut, hex M12	2
44	10350	Spring washer M8	1

Item marked x not shown.

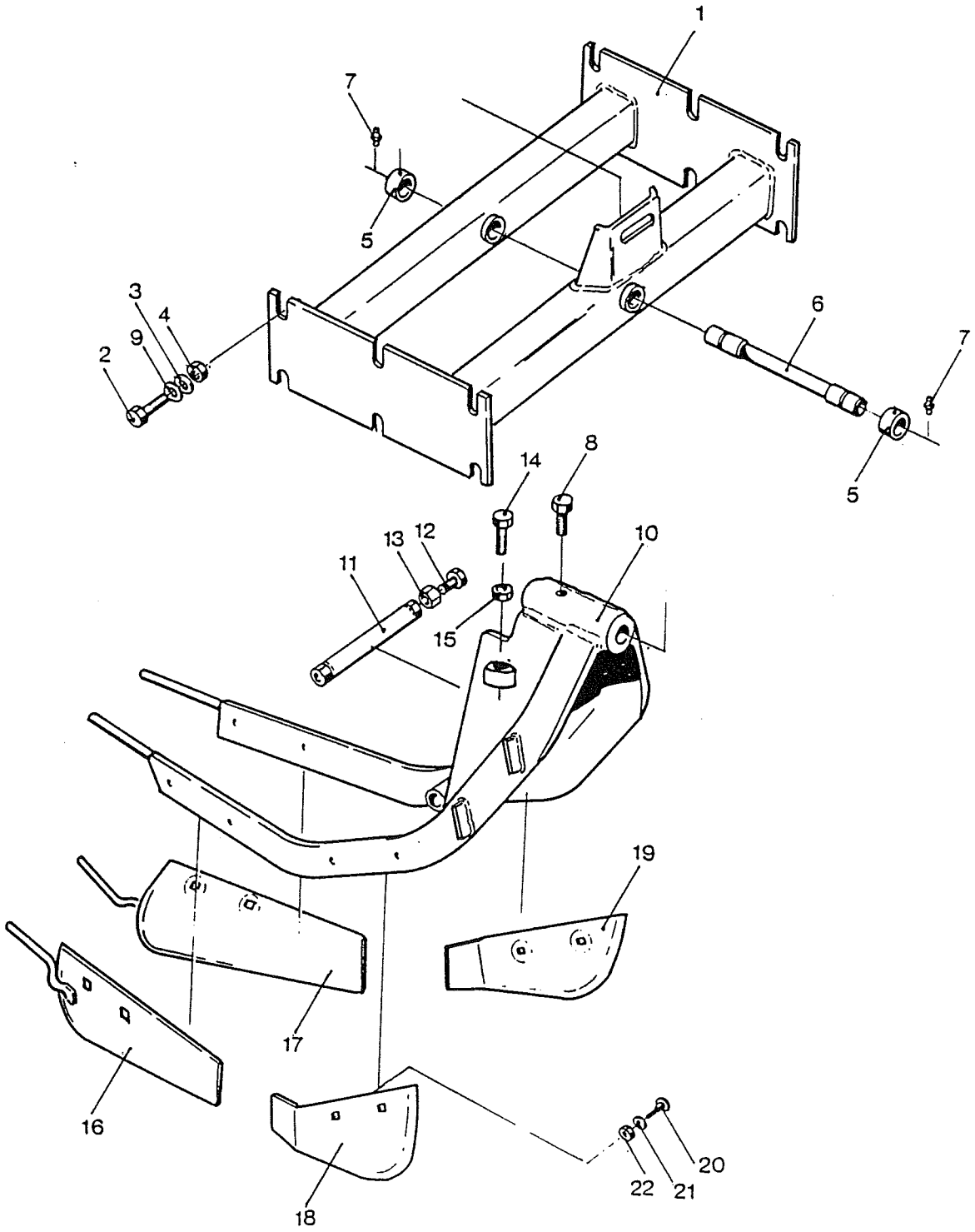
1
7
5
3
4
9
2
6
7
5
14
8
13
12
11
10
15
19
17
16
18
20
22
21

JUKO 100 **From serial number 9Y-40501**

Item	Part no	**SHARE**	Qty/unit
1	95407	Frame	1
2	57231	Locking screw M16X50	12
3	40218	Washer 16x35x5	12
4	53190	Locking nut M16	12
5	54421	Bush	2
6	54424	Axle	1
7	30263	Lubrication nipple M6	2
8	42126	Lock screw M16x30	2
9	95408	Washer 23x45x3	12
	540422	**SHARE, assy**	
10	54422	Share frame	1
11	54447	Adjusting bush	1
12	58368	Screw, hex M16x70	1
12	54534	Screw, hex M16x120	1
13	30124	Nut, hex M16	1
14	58368	Screw, hex M16x70	2
15	30124	Nut, hex M16	2
16	54425	Share, right	1
17	54426	Share, left	1
18	54427	Steel plate, right	1
19	54428	Steel plate, left	1
20	54433	Slotted countersunk head screw M12x50	8
21	10634	Spring washer M12	8
22	30968	Nut, hex M12	8

Item marked x not shown.

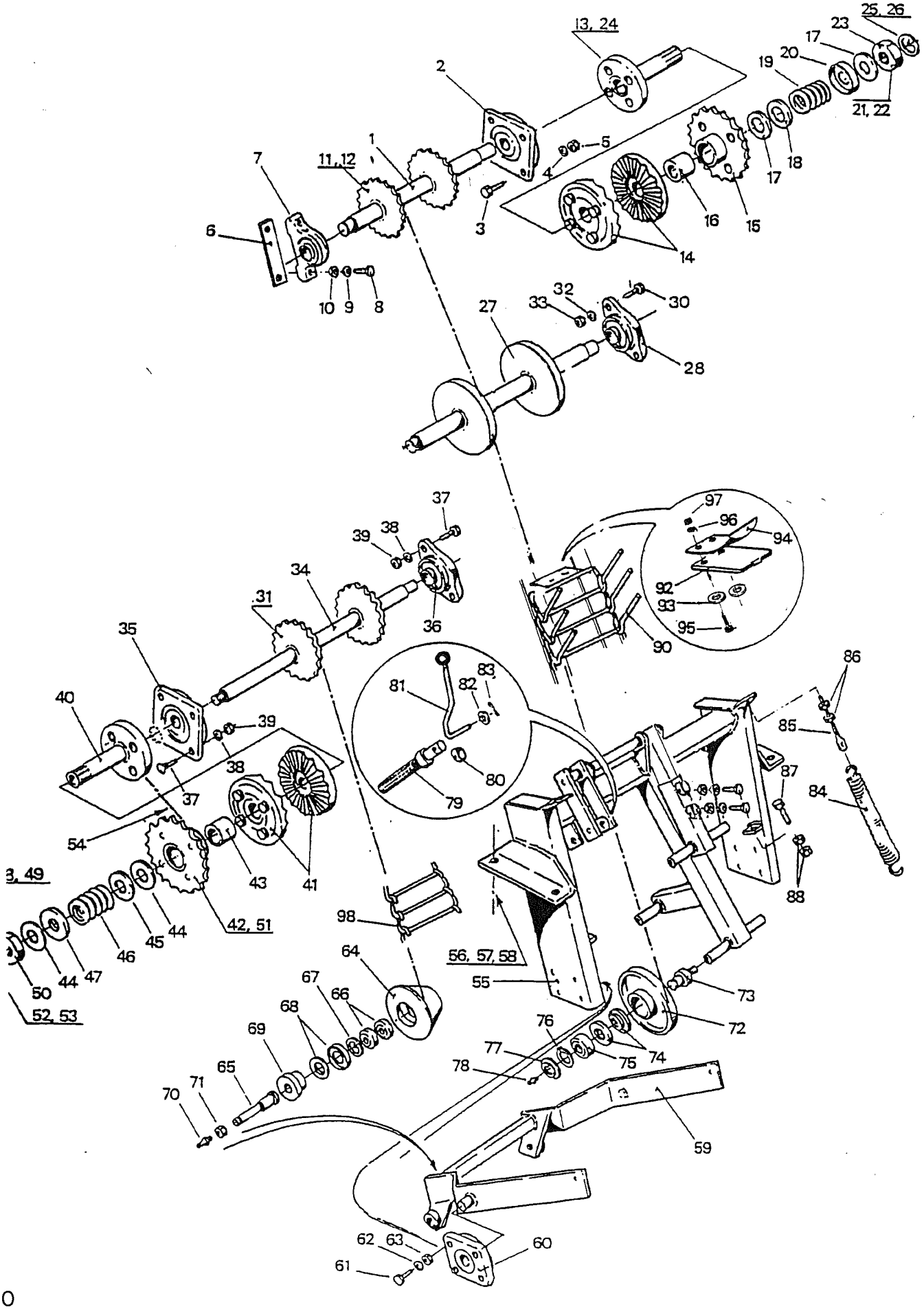
13, 24
25, 26
23
17
20
19
21, 22
2
1
11, 12
7
6
5
4
3
18
17
16
15
14
10
9
8
32
33
30
27
28
37
39
38
34
31
36
35
40
39
38
37
54
43
41
42, 51
3, 49
44
45
46
47
44
50
52, 53
97
96
94
92
93
95
90
81
82
83
80
79
86
85
87
84
88
98
56, 57, 58
55
64
67
66
68
69
65
70
71
73
72
76
77
78
75
74
59
62
63
61
60

JUKO 100 **From serial number 9Y-40501**

Item	Part no	LIFTING ELEVATOR	Qty/unit
1	95661	Drive axle	1
2	57185	Collar step bearing FY 30 TF	1
3	30957	Screw hex M10x30	2
x	42527	Screw, hex M10x40	2
4	10607	Washer M10	4
5	57379	Locking nut M10	4
6	95614	Washer	1
7	53153	Plummer bearing SY305D	1
8	13537	Screw, hex M12x50	2
9	10462	Washer M12	2
10	56448	Locking nut M12	2
11	91637	Drive gear NC50/9	2
x		Kil 8x7x276	1
12	57707	Set screw M8x25 DIN914	4
	950611	**SAFETY GUARD, assy**	
13	52647	Frame tube	1
14	53654	Coupling flange	2
15	95611	Sprocket Z=25 t=19.05	1
16	52648	Bearing	1
17	52685	Washer 41x63x1,5 MS	2
18	52684	Washer 41x63x1,5	1
19	52651	Spring	1
20	52652	Washer	1
21	52682	Locking pin	2
22	40702	Screw hex M10x20	2
23	53681	Pinching nut	1
24		Key 6x6x32	1
25	20554	Washer 10x30x2	1
26	10153	Washer, spring M10	1
x	30958	Screw, hex M10x25	1
27	95651	Axle	1
28	57187	Collar step bearing FY TB 25 TF	2
30	30957	Screw, hex M10x30	4
31	95653	Sprocket Z=15	2
32	10607	Washer M10	4
33	57379	Nut hex M10	4
34	95662	Axle/lower elevator	1
x		Key 8x7x195	1
x	95665	Set screw M16x20	2
35	95635	Collar step bearing FY 30 TF	1
36	67118	Collar step bearing FY TB 30 TF	1
37	30957	Screw, hex M10x30	2
x	57537	Lock screw M10x30	4
38	10607	Washer M10	6
39	57379	Locking nut M10	6

Item marked x not shown.

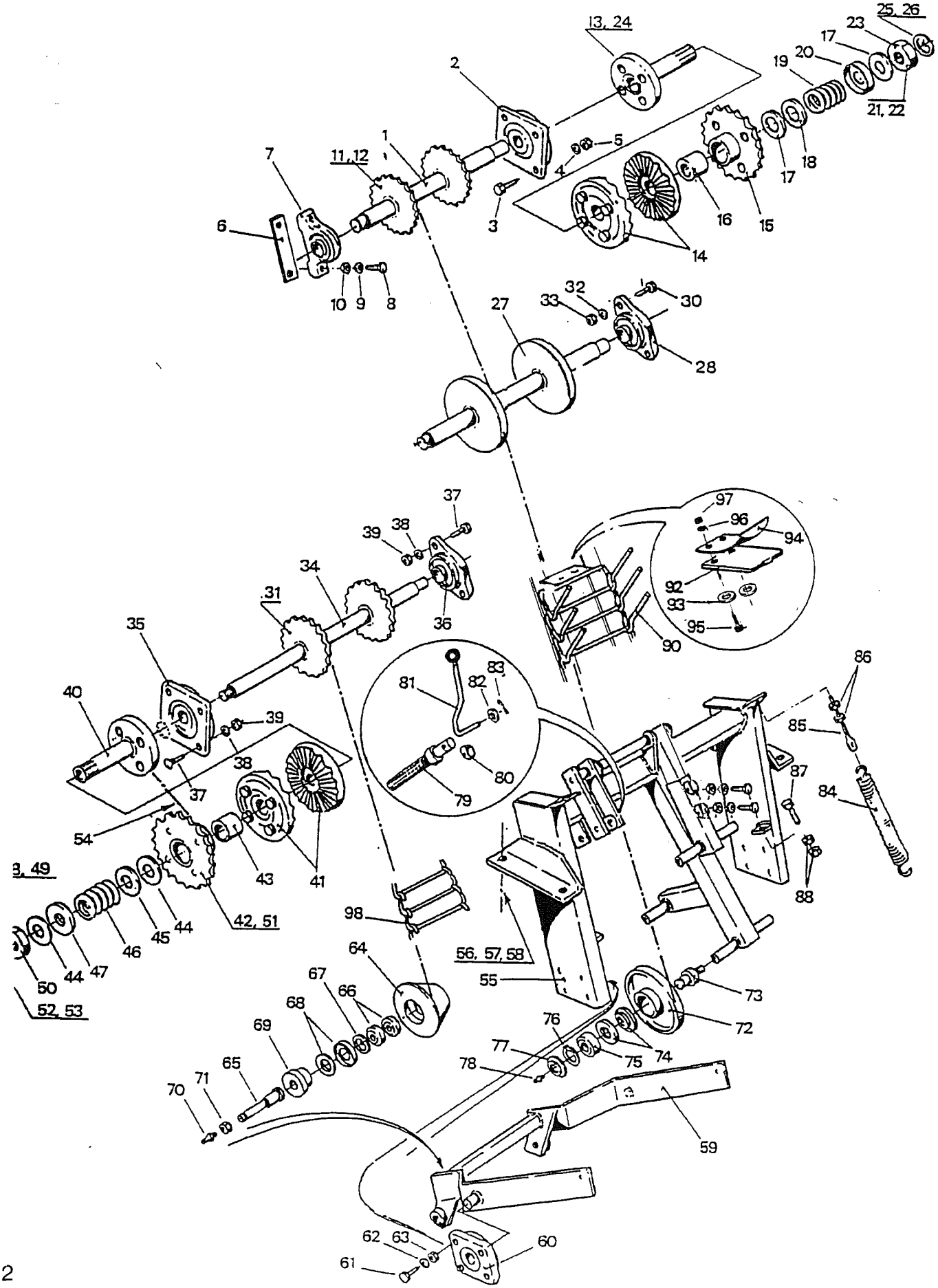
13, 24
25, 26
23
17
20
19
21, 22
2
1
5
4
7
11, 12
18
17
16
15
3
6
14
10
9
8
32
33
30
27
28
37
97
96
94
39
38
34
92
93
31
36
95
90
35
86
83
81
82
40
39
85
38
80
87
37
79
84
54
43
41
88
3, 49
42, 51
98
44
45
46
56, 57, 58
50
44
47
64
55
73
52, 53
67
66
68
72
76
69
77
74
75
78
65
71
70
59
62
63
60
61

Item	Part no	LIFTING ELEVATOR	Qty/unit
	950610	**SAFETY GUARD, assy**	
40	52647	Frame tube	1
41	52649	Coupling flange	2
42	53675	Sprocket Z=23 t=19.05	1
43	52648	Bearing	1
44	52685	Washer 41x63x1,5 MS	2
45	52684	Washer 41x63x1,5	1
46	52651	Spring	1
47	52652	Washer	1
48	52682	Locking pin	2
49	40702	Screw, hex M10x20	2
50	53681	Pinching nut	1
51		Key 6x6x32	1
52	20554	Washer 10x30x2	1
53	10153	Washer, spring M10	1
x	30958	Screw, hex. M10x25	1
54	87666	Roller chain 3/4x7/16x64 l.	1
55	95429	Frame	1
x	95428	Skaft	1
x	30968	Screw, hex M12x40	2
x	30959	Nut, hex M12	2
56	30955	Screw, hex M12x110	4
57	10462	Washer M12	4
58	56448	Locking nut M12	4
59	95421	Frame	1
x	56548	Guard	2
60	30188	Collar step bearing FY 25 TF	2
61	30957	Screw, hex M10x30	8
62	10607	Washer M10	8
63	57379	Locking nut M10	8
	900712	**TURNING ROLLERS, assy**	**2**
64	90712	Turning rollers	1
65	86425	Axle	1
66	53423	Ball bearing 6204	2
67	53424	Circlip J47x1,75	1
68	10845	Z-seal Z007	1
69	52481	Insertion plate	1
70	30263	Lubrication nipple M6	1
71	30124	Nut, hex M16	1

Item marked x not shown.

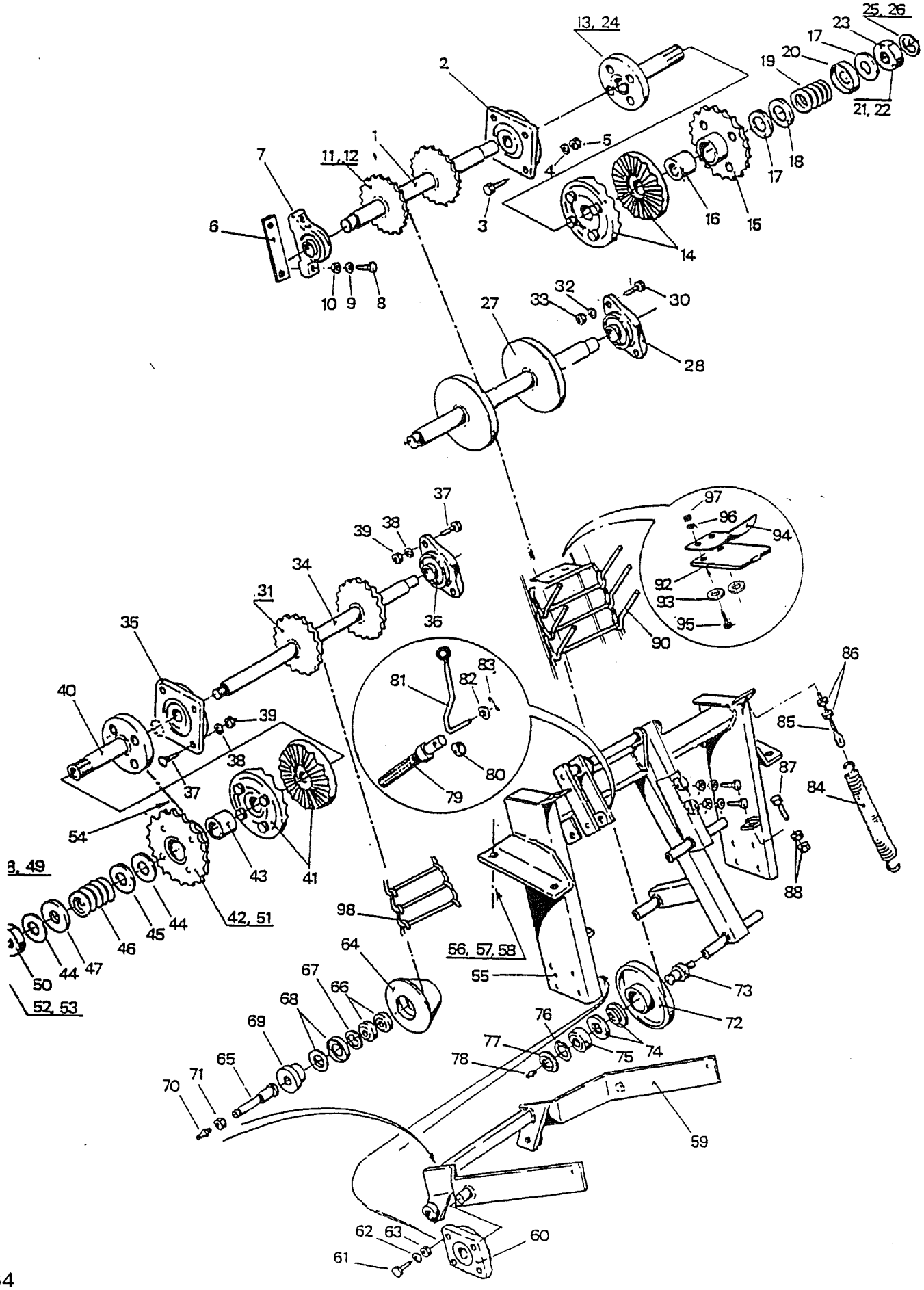

13, 24
25, 26
23
17
20
19
21, 22
2
1
5
4
7
11, 12
18
17
16
15
3
6
14
10
9
8
32
33
30
27
28
37
97
96
94
39
38
34
92
93
31
36
95
90
35
86
83
81
82
40
39
85
38
80
87
37
79
84
54
43
41
88
3, 49
42, 51
98
45
44
46
56, 57, 58
44
47
50
64
55
73
52, 53
67
66
68
72
76
69
77
74
75
65
78
71
70
59
62
63
60
61

Item	Part no	LIFTING ELEVATOR	Qty/unit
	950430	**SUPPORTING ROLLERS, assy**	**6**
72	95430	Supporting roller	1
73	54463	Axle	1
74	52422	Z-seal Z304	1
75	52423	Ball bearing 6304	1
x	52424	Washer 20,5x30x2	1
x	10838	Circlip A20x1,2	1
76	52427	Circlip J52x2	1
77	52426	Dust screen	1
78	30263	Lubrication nipple M6	1
x	30983	Star washer M16	1
79	95422	Adjusting screw	1
80	85568	Ring	1
81	620201	Crank	1
82	10607	Washer M10	1
83	10463	Cotter pin 3,2x16	1
84	63624	Spring	2
85	54594	Adjusting screw	2
86	30968	Nut, hex M12	4
87	54534	Screw hex M16x120	2
88	30124	Nut, hex M16	4
90	**910638**	**UPPER ELEVATOR, assy**	**1**
x	89457	Cogged belt 85/50 T	2
x	89427	Rod	8
x	91638	Rod	77
x	58328	Plate	170
x	57398	Rivet 6x17	340
90	**910638**	**UPPER ELEVATOR, assy**	**1**
x	89491	Cogged belt 85/50 T	2
x	89427B	Rod	8
x	91638B	Rod	77
x	58328	Plate	170
x	57398	Rivet 6x17	340
92	95441	Flail	16
93	163517	Washer	16
94	89431	Plate	8
95	53410	Screw, hex M8x35	16
96	10350	Washer, spring M8	16
97	30969	Nut, hex M8	16
	950424	**LOWER ELEVATOR, assy**	
98	54435	Elevator link	57

Item marked x not shown.

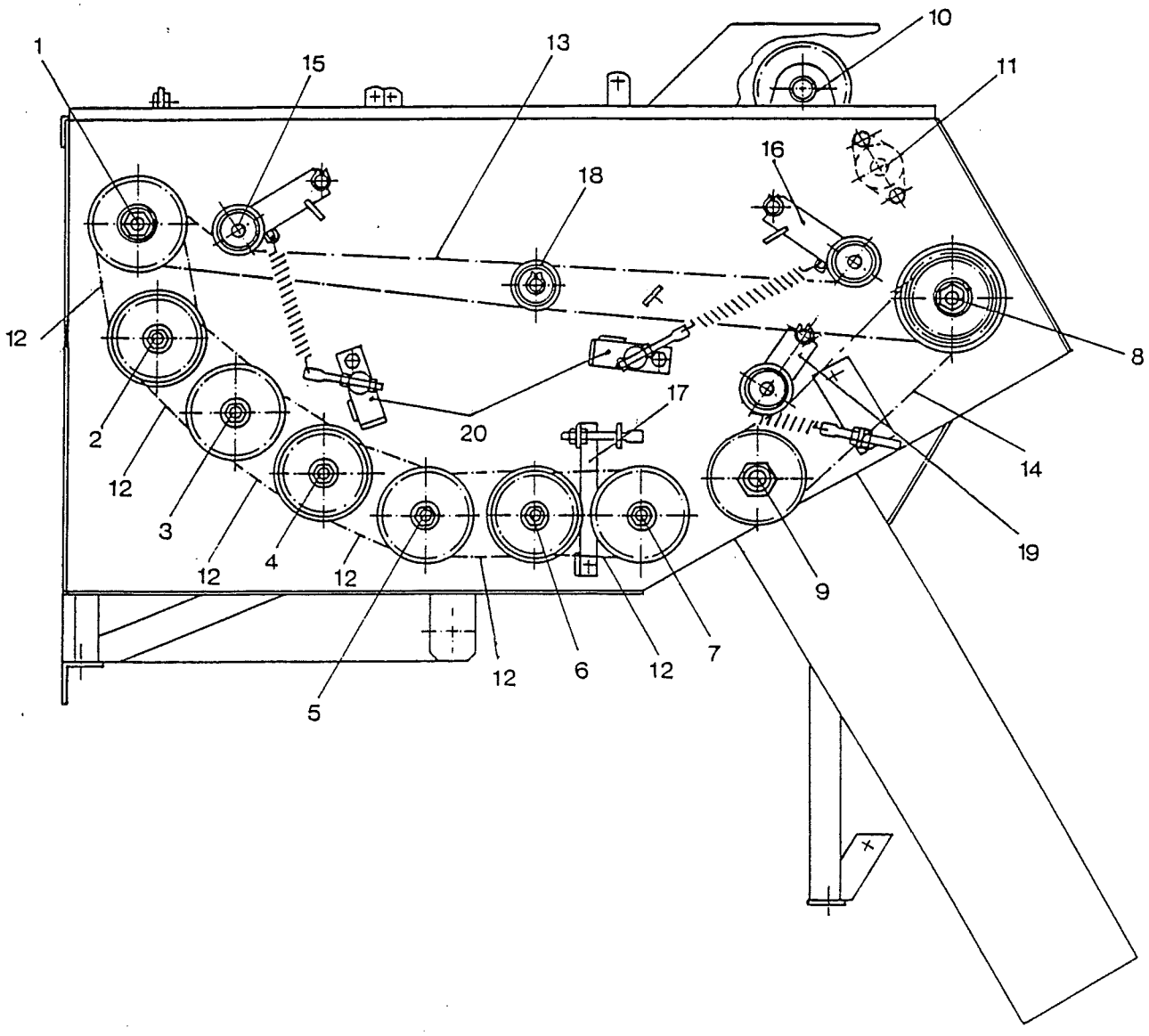
1
15
13
10
11
16
18
12
8
2
20
17
14
12
3
19
12
4
12
9
12
6
12
7
5

Item	Part no	CLEANING UNIT	Qty/unit
		Peg roller drum 1	
2		Peg roller drum 2	
3		Peg roller drum 3	
4		Peg roller drum 4	
5		Peg roller drum 5	
6		Peg roller drum 6	
7		Peg roller drum 7	
8	90652	Main power transmission shaft	1
9	95605	Drive axle/lower elevator	1
10	95637	Drive axle/upper elevator	1
11	95608	Axle	1
12		Roller chain 5/8x3/8-49 l.	6
13		Roller chain 3/4x7/16-156 l.	1
14		Roller chain 3/4x7/16-64 l.	1
15	860636	Chain tightener	1
16	540535	Chain tightener	1
17	90627	Tightening bar	1
18	950645	Chain tightener	1
19	950646	Chain tightener	1
20	95641	Tightening bar	2

NOTE!
The spare part numbers for the cleaning drum parts given on the following pages apply to machines with polyuretane peg rollers in the main cleaning unit. For machines with rubber peg rollers the substitute numbers are:

Polyuretane	Rubber
90640	90920
90641	90921
90642	91604
90645	91606
90650	91605

Item marked x not shown.

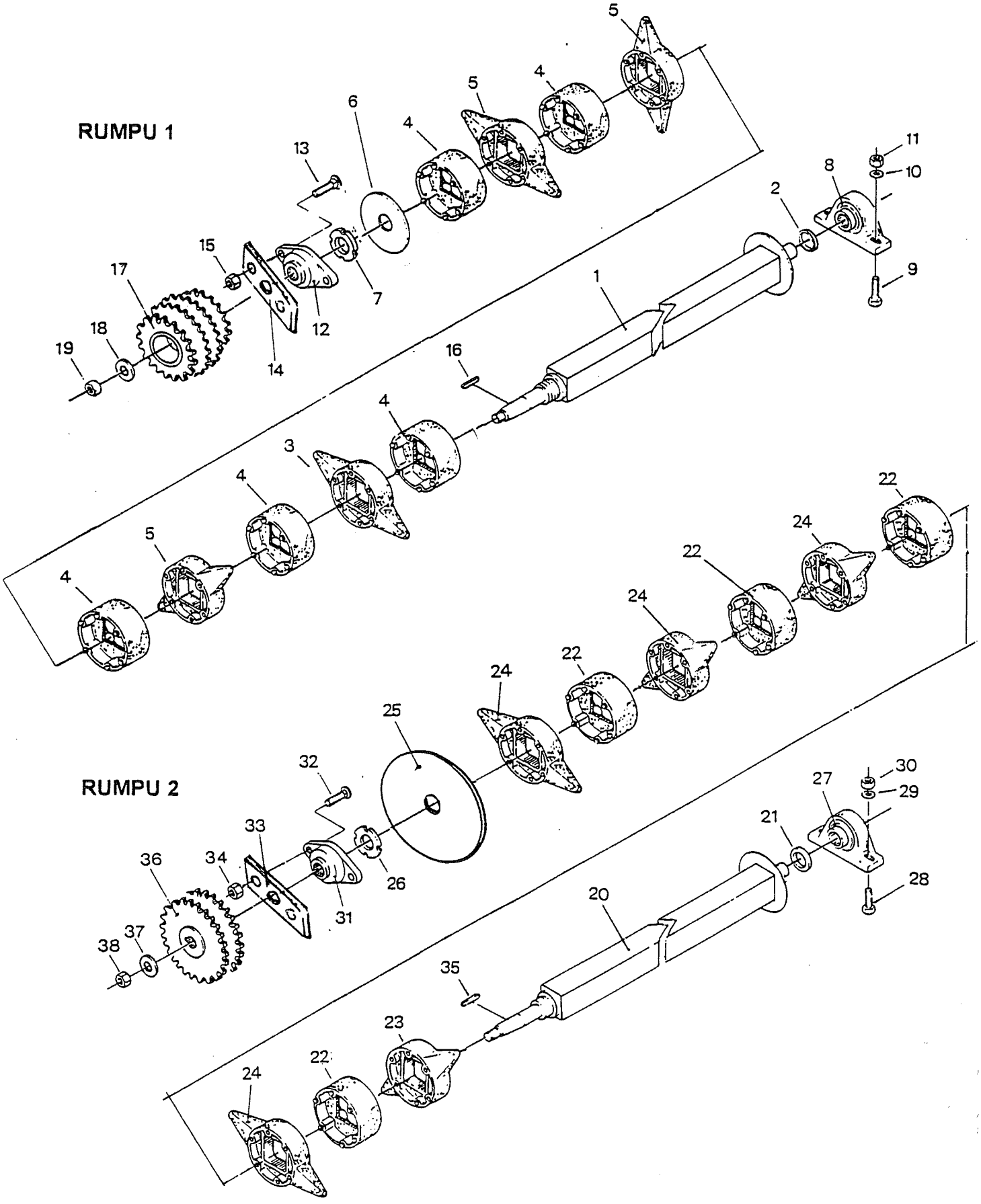
RUMPU 1
RUMPU 2
1
2
3
4
5
6
7
8
9
10
11
12
13
14
15
16
17
18
19
20
21
22
23
24
25
26
27
28
29
30
31
32
33
34
35
36
37
38

JUKO 100 **From serial number 4V-40101**

Item	Part no	CLEANING UNIT	Qty/unit
		PEG ROLLER DRUM 1, assy	1
1	95667	Axle	1
2	30244	Ring 33,7x3,25-6	1
3	90640	Peg roller	8
4	90642	Intermediate roller	24
5	90641	Peg roller	15
6	90647	Flange	1
7	53239	Slotted round nut for hook spanner KM7	1
x	53240	Washer MB7	1
8	90321	Plummer bearing SY 25 TF	1
9	30947	Screw, hex M10x35	2
10	10607	Washer M10	2
11	57379	Locking nut M10	2
12	67118	Collar step bearing FYTB30TF	1
13	57539	Lock screw M10x30	2
14	87660	Washer	2
15	57379	Locking nut M10	2
16		Key 5x5x37	1
17	90675	Sprocket Z=27/19/21/25	1
18	53942	Washer M20	1
19	20645	Nut, hex M20	1
		PEG ROLLER DRUM 2, assy	1
20	95668	Axle	1
21	30244	Ring 33,7x3,25-6	1
22	90642	Intermediate roller	23
23	90640	Peg roller	8
24	90641	Peg roller	16
25	90681	Flange	1
26	10847	Slotted round nut for hook spanner KM7	1
27	90321	Plummer bearing SY25TF	1
28	30947	Screw, hex M10x35	2
29	10607	Washer M10	2
30	57379	Locking nut M10	2
31	57187	Collar step bearing FYTB25TF	1
32	57539	Lock screw M10x30	2
33	87660	Washer	2
34	57379	Locking nut M10	2
35		Key 5x5x37	1
36	54659	Double sprocket Z=28/27 t=15,875	1
37	30887	Washer M16	1
38	30124	Nut, hex M16	1

Item marked x not shown.

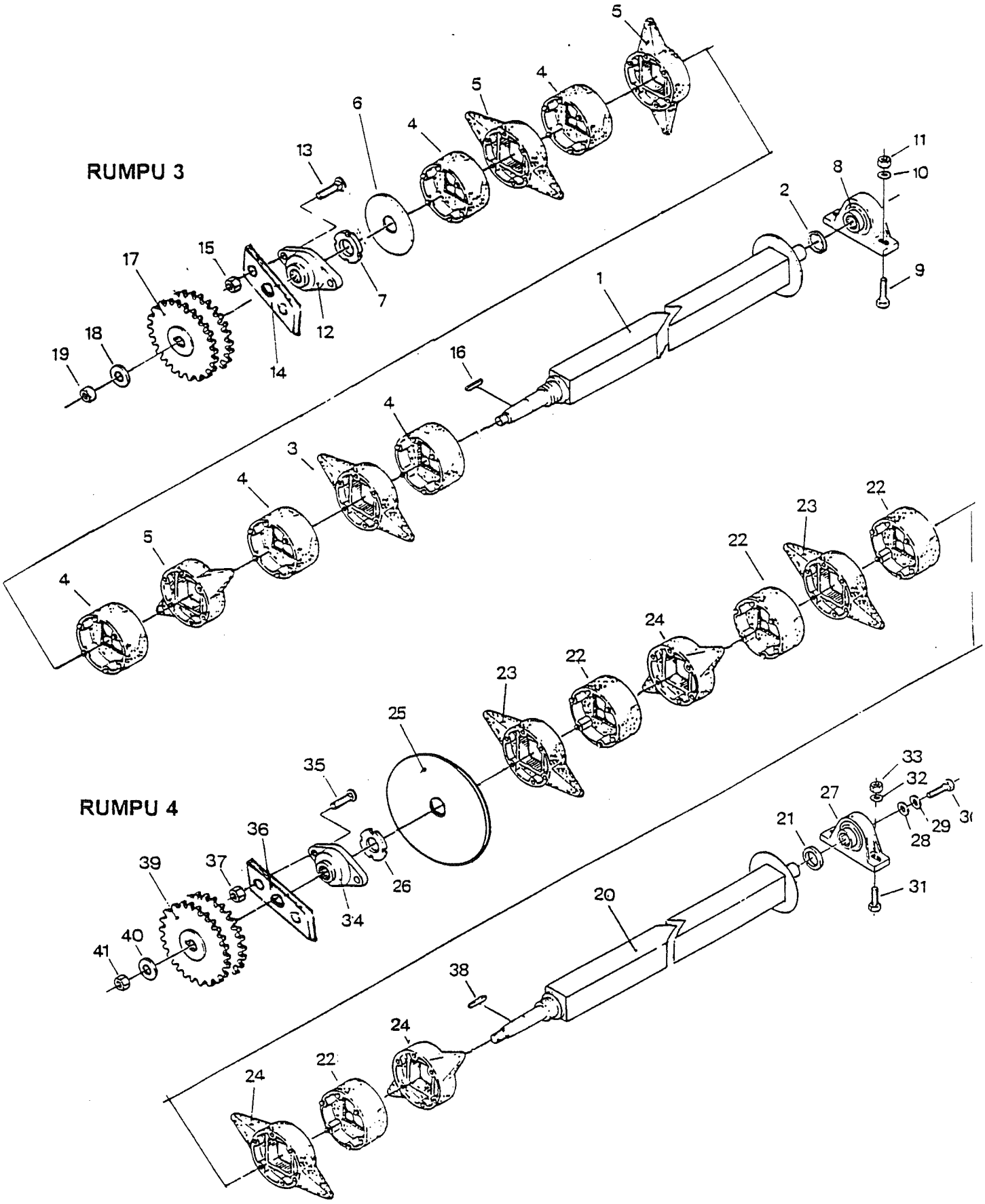
RUMPU 3
RUMPU 4

Item	Part no	CLEANING UNIT	Qty/unit
		PEG ROLLER DRUM 3, assy	1
1	95668	Axle	1
2	30244	Ring 33,7x3,25-6	1
3	90640	Peg roller	8
4	90642	Intermediate roller	24
5	90641	Peg roller	15
6	90619	Flange	1
7	10847	Slotted round nut for hook spanner KM6	1
8	90321	Plummer bearing SY25TF	1
9	30947	Screw, hex M10x35	2
10	10607	Washer M10	2
11	57379	Locking nut M10	2
12	57187	Collar step bearing FYTB25TF	1
13	57539	Lock screw M10x30	2
14	87660	Washer	2
15	57379	Locking nut M10	2
16		Key 5x5x37	1
17	54658	Double sprocket Z=27/28 t=15,875	1
18	30887	Washer M16	1
19	30124	Nut, hex M16	1
		PEG ROLLER DRUM 4, assy	1
20	95668	Axle	1
21	30244	Ring 33,7x3,25-6	1
22	90642	Intermediate roller	23
23	90640	Peg roller	8
24	90641	Peg roller	16
25	90681	Flange	1
26	10847	Slotted round nut for hook spanner KM6	1
27	90321	Plummer bearing SY25TF	1
31	30947	Screw, hex M10x35	2
32	10607	Washer M10	2
33	57379	Locking nut M10	2
34	57187	Collar step bearing FYTB25TF	1
35	57539	Lock screw M10x30	2
36	87660	Washer	2
37	57379	Locking nut M10	2
38		Key 5x5x37	1
39	54659	Double sprocket Z=28/27 t=15,875	1
40	30887	Washer M16	1
41	30124	Nut, hex M16	1

Item marked x not shown.

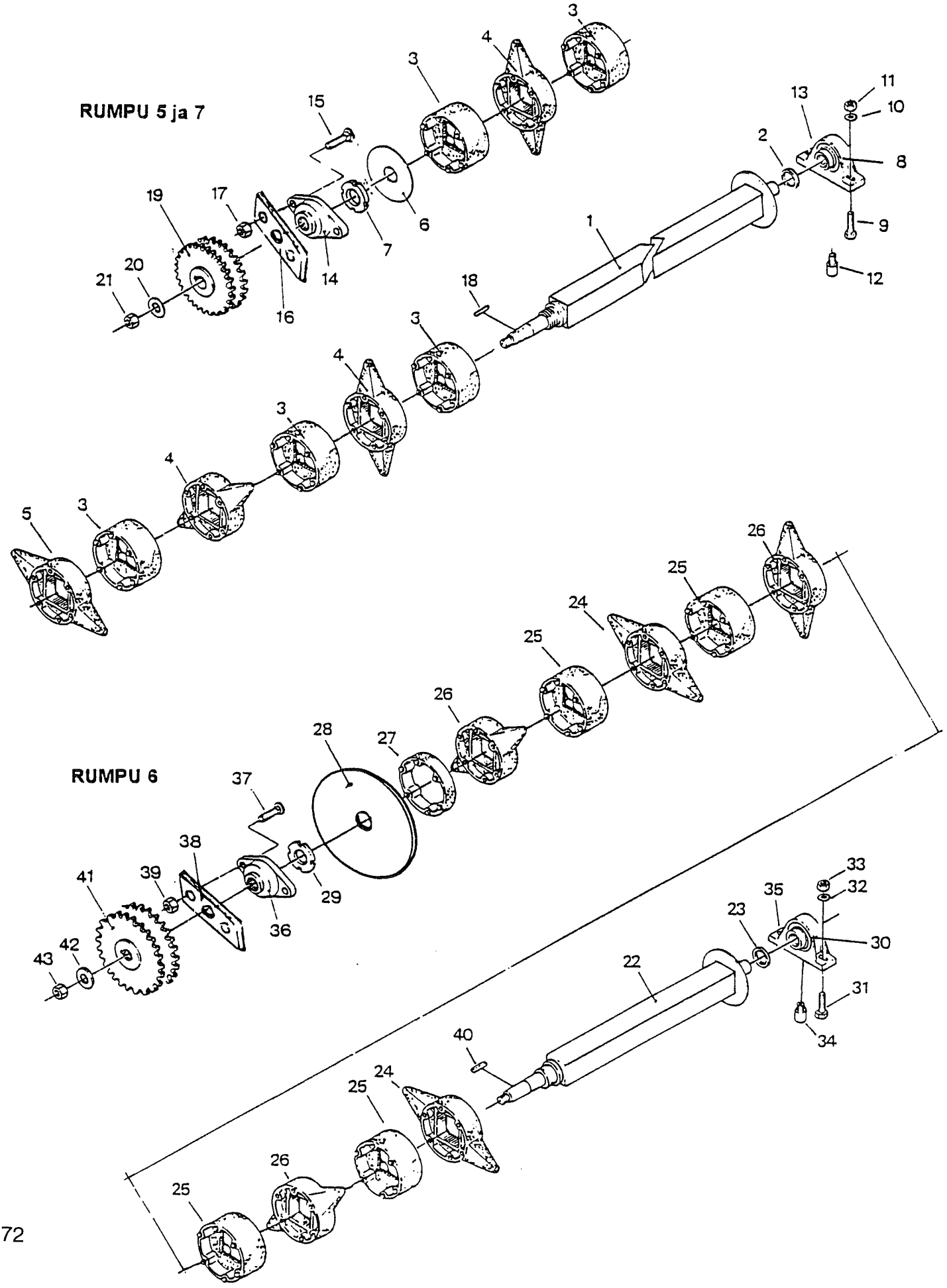
RUMPU 5 ja 7
RUMPU 6
1
2
3
4
5
6
7
8
9
10
11
12
13
14
15
16
17
18
19
20
21
22
23
24
25
26
27
28
29
30
31
32
33
34
35
36
37
38
39
40
41
42
43

Item	Part no	CLEANING UNIT	Qty/unit
		PEG ROLLER DRUM 5 AND 7, assy	**2**
1	90607	Axle	1
2	30244	Ring	1
3	90642	Intermediate roller	17
4	90641	Peg roller	11
5	90640	Peg roller	5
6	90619	Flange	1
7	10847	Slotted round nut for hook spanner KM6	1
8	54694	Plummer bearing SY25TF	1
9	30947	Screw, hex M10x35	4
10	10607	Washer M10	4
11	57379	Locking nut M10	4
12	86638	Extension	2
13	30254	Slotted countersunk head screw M8x20	2
14	57187	Collar step bearing FYTB25TF	2
15	57539	Lock screw M10x30	4
16	87660	Washer	4
17	57379	Locking nut M10	4
18		Key 5x5x37	2
19	54658	Double sprocket Z=27/28 t=15,875	2
20	30887	Washer M16	2
21	30124	Nut, hex M16	2
		PEG ROLLER DRUM 6, assy	**1**
22	90607	Axle	1
23	30244	Ring	1
24	90640	Peg roller	6
25	90642	Intermediate roller	16
26	90641	Peg roller	11
27	90645	Intermediate roller	1
28	90681	Flange	1
29	10847	Slotted round nut for hook spanner KM6	1
30	54694	Plummer bearing SY25TF	1
31	30947	Screw, hex M10x35	2
32	10607	Washer M10	2
33	57379	Nut, hex M10	2
34	86638	Extension	1
35	30254	Slotted countersunk head screw M8x20	1
36	57187	Collar step bearing FYTB25TF	1
37	57539	Lock screw M10x30	2
38	87660	Washer	2
39	57379	Locking nut M10	2
40		Key 5x5x37	1
41	54659	Double sprocket Z=28/27 t=15,875	1
42	30887	Washer M16	1
43	30124	Nut, hex M16	1

Item marked x not shown.

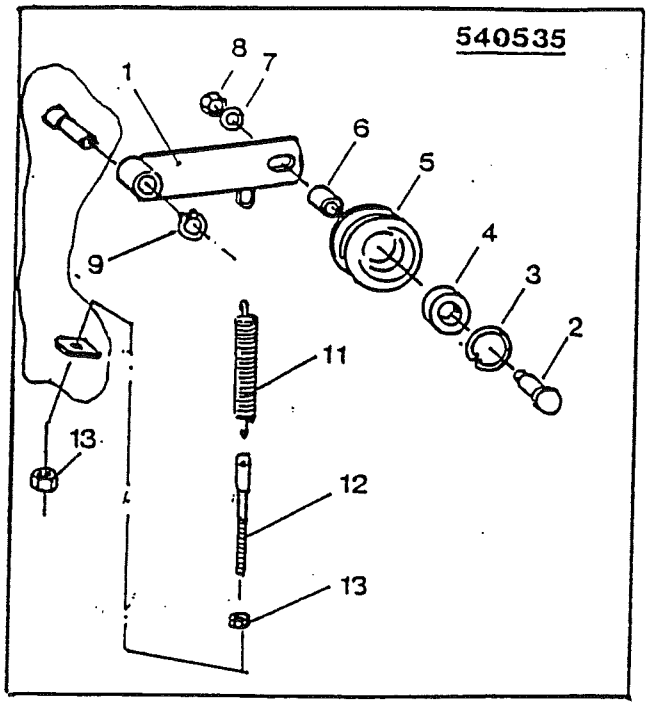
540535
1
8
7
6
5
4
3
2
9
11
13
12
13

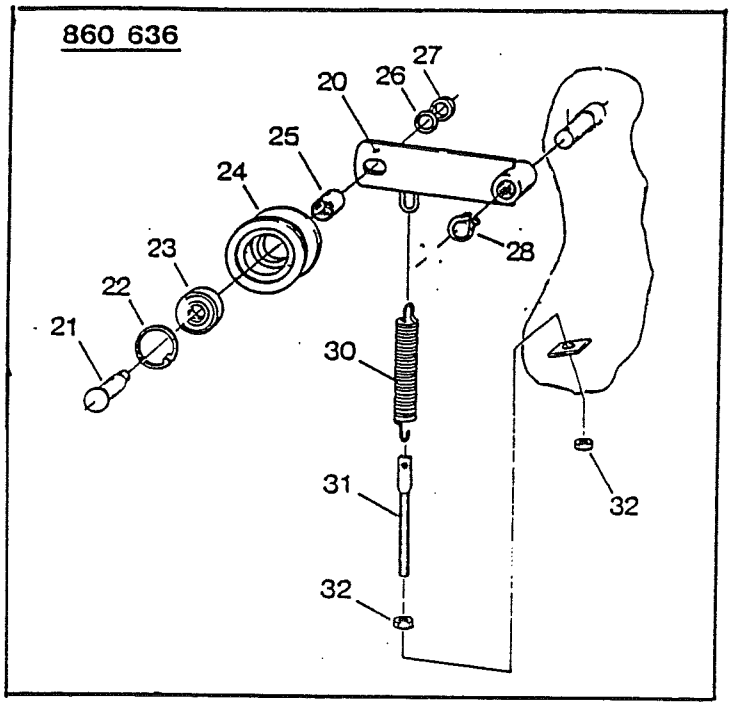
860 636
27
26
20
25
24
23
22
21
28
30
31
32
32

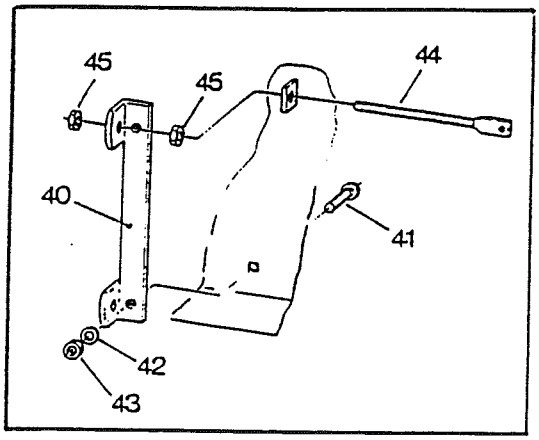
45
45
44
40
41
42
43

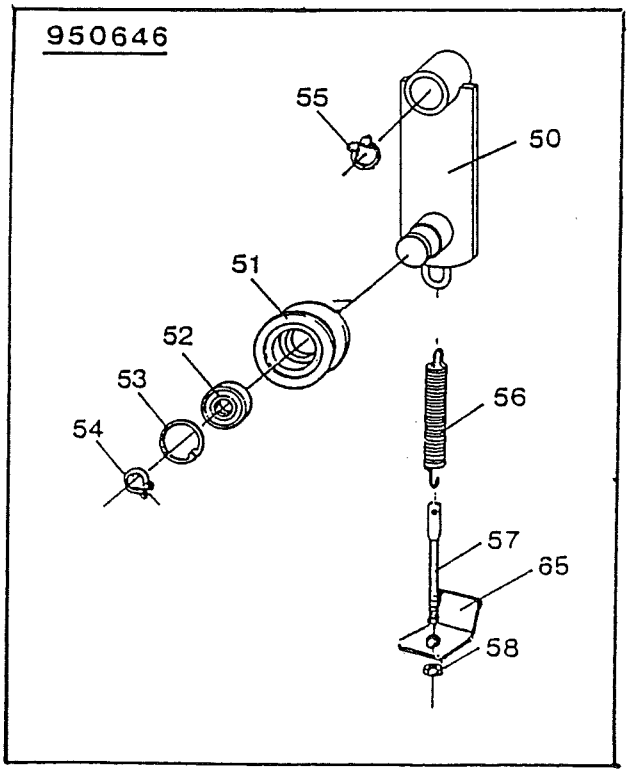
950646
55
50
51
52
53
54
56
57
65
58

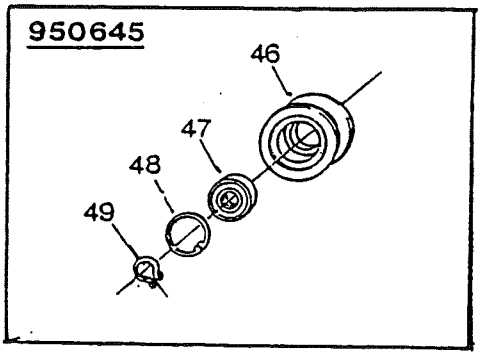
950645
46
47
48
49

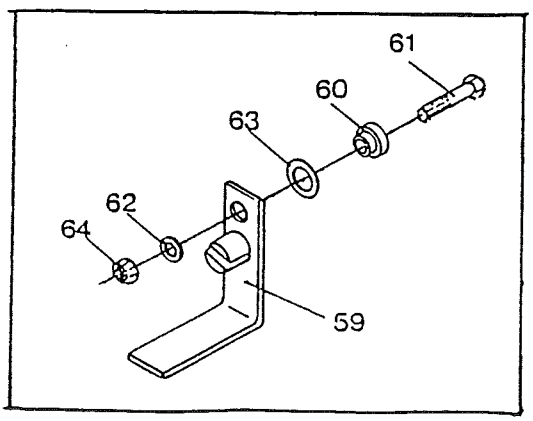
61
60
63
62
64
59

Item	Part no	CLEANING UNIT	Qty/unit
	540535	**CHAIN TIGHTENER, assy**	**1**
1	57594	Lever	1
2	57595	Axle	1
3	53424	Circlip J47x1,75	1
4	63223	Ball bearing 6204 2RS	1
5	57563	Roller	1
6	57564	Spacer tube	1
7	40151	Spring washer M16	1
8	30124	Nut, hex M16	1
9	27252	Circlip A 19x1,2	1
11	53276	Tension spring	1
12	57445	Adjusting screw	1
13	10760	Nut, hex M10	2
	860636	**CHAIN TIGHTENER, assy**	**2**
20	57594	Lever	1
21	57595	Axle	1
22	53424	Circlip J47x1,75	1
23	63223	Ball bearing 6204 2RS	1
24	57563	Roller	1
25	57564	Spacer tube	1
26	40151	Spring washer M16	1
27	30124	Nut, hex M16	1
28	27252	Circlip A 19x1,2	2
30	53276	Tension spring	1
31	57445	Adjusting spring	1
32	10760	Nut, hex M10	2
40	90627	Tightening bar	1
41	53408	Screw, hex M8x30	1
42	10784	Washer M8	1
43	30969	Nut, hex M8	1
44	57445	Adjusting screw	1
45	10760	Nut, hex M10	2
	950645	**CHAIN TIGHTENER, assy**	**1**
46	57563	Roller	1
47	63223	Ball bearing 6204-2 RS	1
48	53424	Circlip J47x1,75	1
49	27252	Circlip A19x1,2	1

Item marked x not shown.

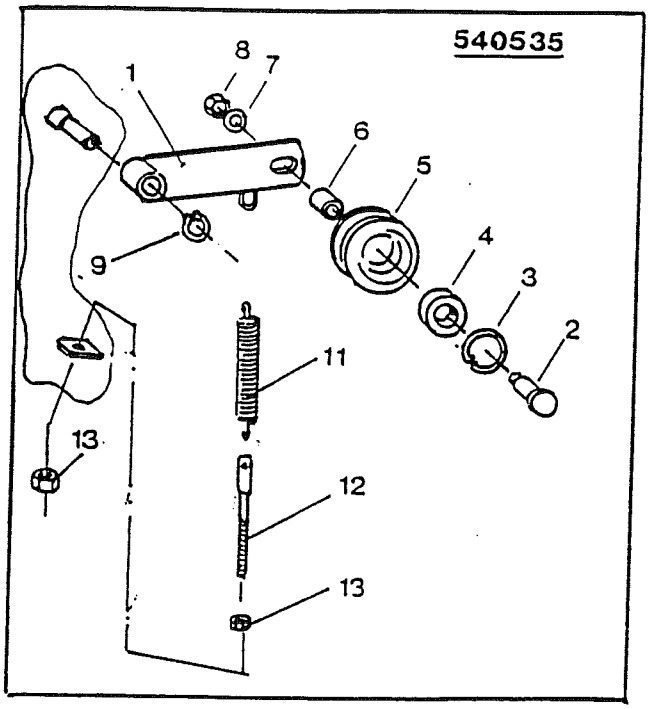
540535
1
2
3
4
5
6
7
8
9
11
12
13
13

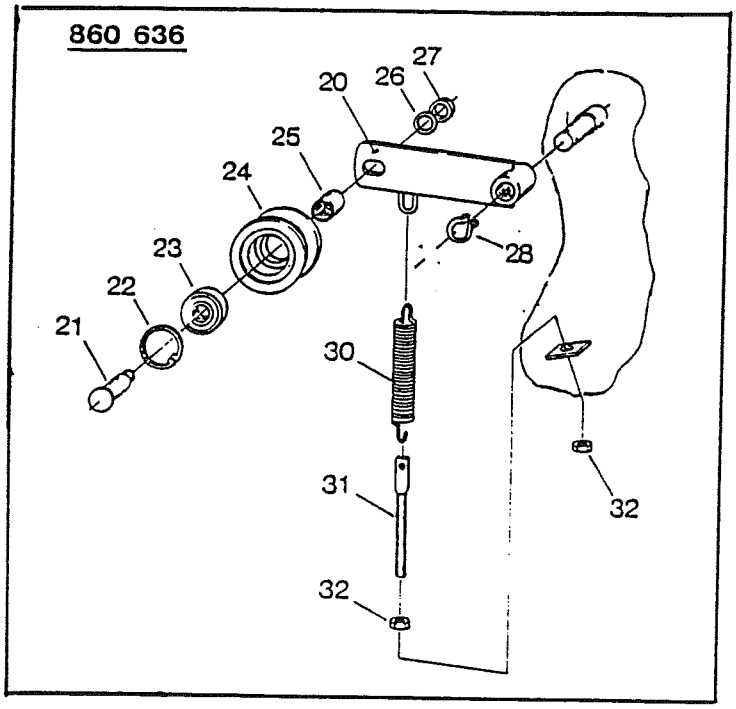
860 636
20
21
22
23
24
25
26
27
28
30
31
32
32

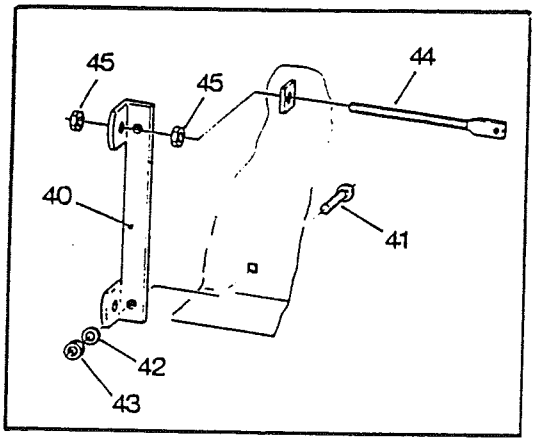
40
41
42
43
44
45
45

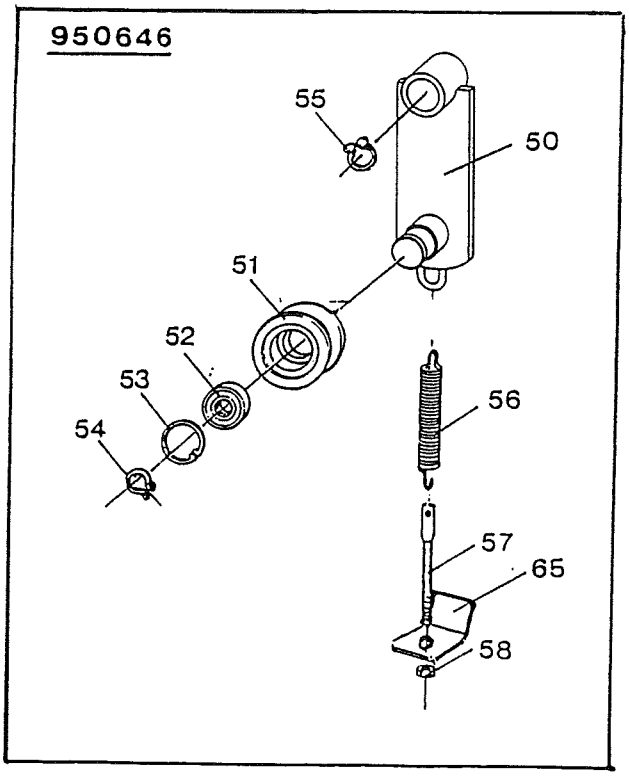
950646
50
51
52
53
54
55
56
57
58
65

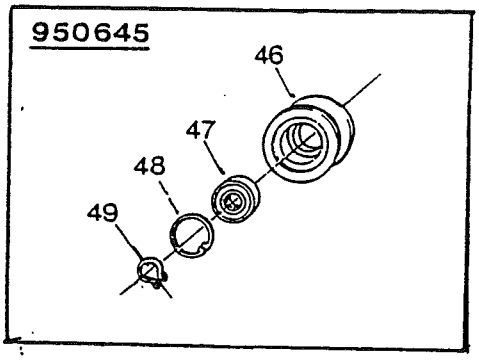
950645
46
47
48
49

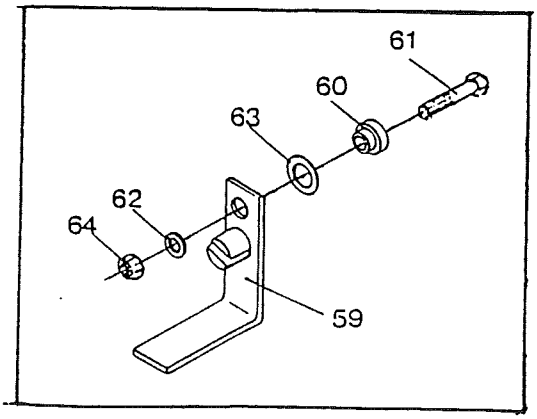
59
60
61
62
63
64

Item	Part no	CLEANING UNIT	Qty/unit
	950646	**CHAIN TIGHTENER, assy**	
50	95646	Lever	1
51	57563	Roller	1
52	63223	Ball bearing 6204 2RS	1
53	53424	Circlip J47x1,75	1
54	10838	Circlip A20x1,2	1
55	27252	Circlip A19x1,2	1
56	60176	Tension spring	1
57	57445	Adjusting screw	1
58	10760	Nut, hex M10	2
59	95641	Tightening bar	2
60	95642	Axle	2
61	57539	Lock screw M10x30	2
62	10607	Washer M10	2
63	10933	Washer 20,5x35x0,75	2
64	57379	Locking nut M10	2
65	57568	Bracket	1

Item marked x not shown.

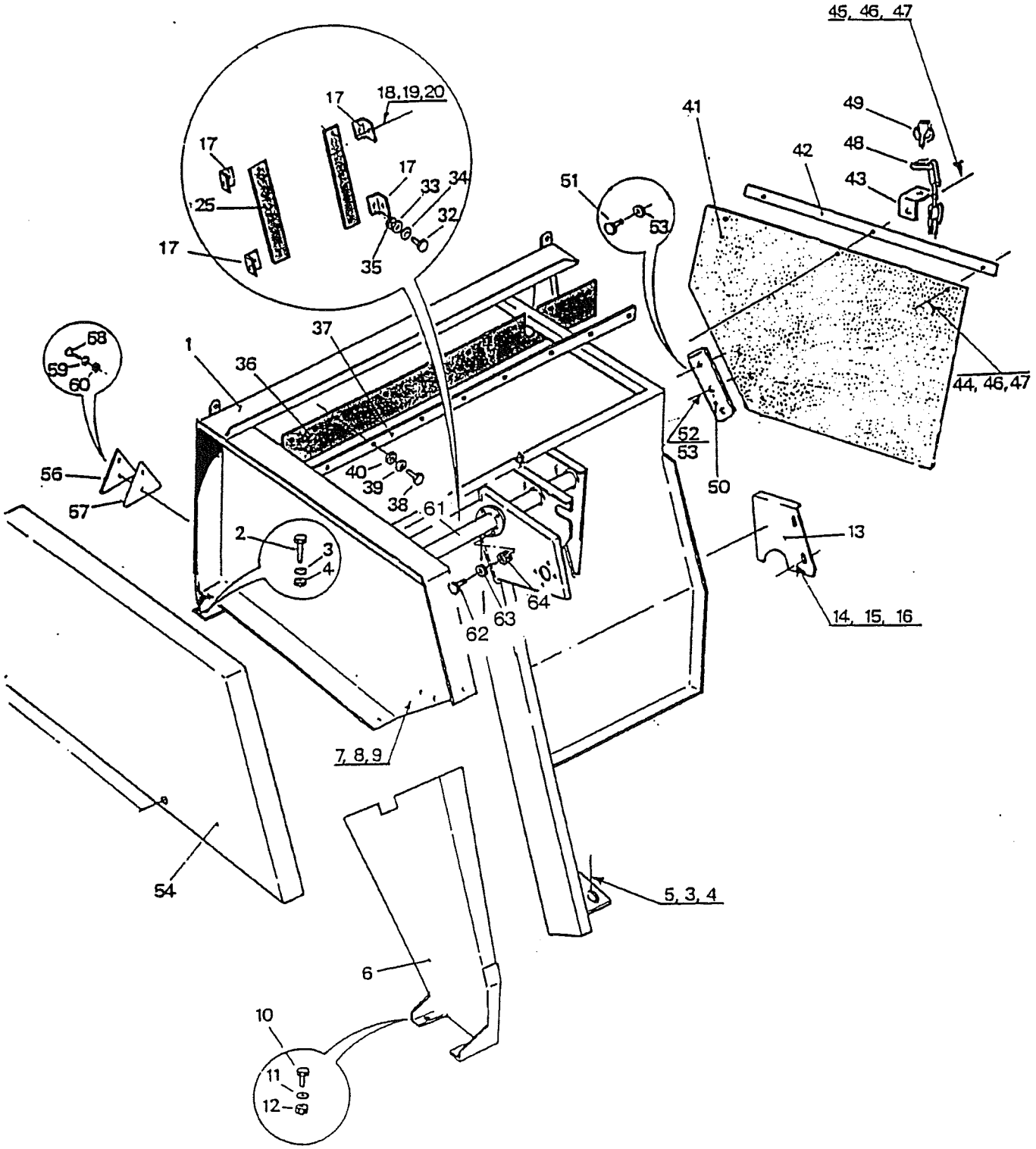
45, 46, 47
49
48
43
42
41
51
53
44, 46, 47
52
53
50
13
14, 15, 16
17
18,19,20
17
17
25
17
33
34
32
35
37
1
36
58
59
60
56
57
40
39
38
61
2
3
4
62
63
64
7, 8, 9
54
5, 3, 4
6
10
11
12

Item	Part no	**CLEANING UNIT**	Qty/unit
1	95666	Frame	1
2	40106	Screw, hex M12x140	1
x	42118	Screw, hex M12x160	2
3	10462	Washer M12	7
4	56448	Locking nut M12	7
5	30955	Screw, hex M12x110	4
6	95638	Guard	1
7	57624	Lock screw M10x25	3
8	10607	Washer M10	3
9	57379	Locking nut M10	3
10	30955	Screw, hex M12x110	2
11	10462	Washer M12	2
12	56448	Locking nut M12	2
13	95636	Corner plate	1
14	53363	Screw, hex M8x20	2
15	10784	Washer M8	2
16	57550	Locking nut M8	2
17	95602	Bracket	4
18	40702	Screw, hex M10x20	4
19	10607	Washer M10	4
20	10760	Locking nut M10	4
25	95604	Rubber plate	2
32	53408	Screw, hex M8x30	4
33	20554	Washer 10x30x2	4
34	10784	Washer M8	4
35	30969	Nut, hex M8	4
36	54652	Rubber sheet	1
37	54606	Backing plate	1
38	53408	Screw, hex M8x30	7
39	10784	Washer M8	7
40	30969	Nut, hex M8	7
41	95639	Rubber sheet	1
42	95640	Washer	1
43	95626	Bracket.	1
44	53408	Screw, hex M8x30	2
45	53410	Screw, hex M8x35	1
46	10784	Washer M8	3

Item marked x not shown.

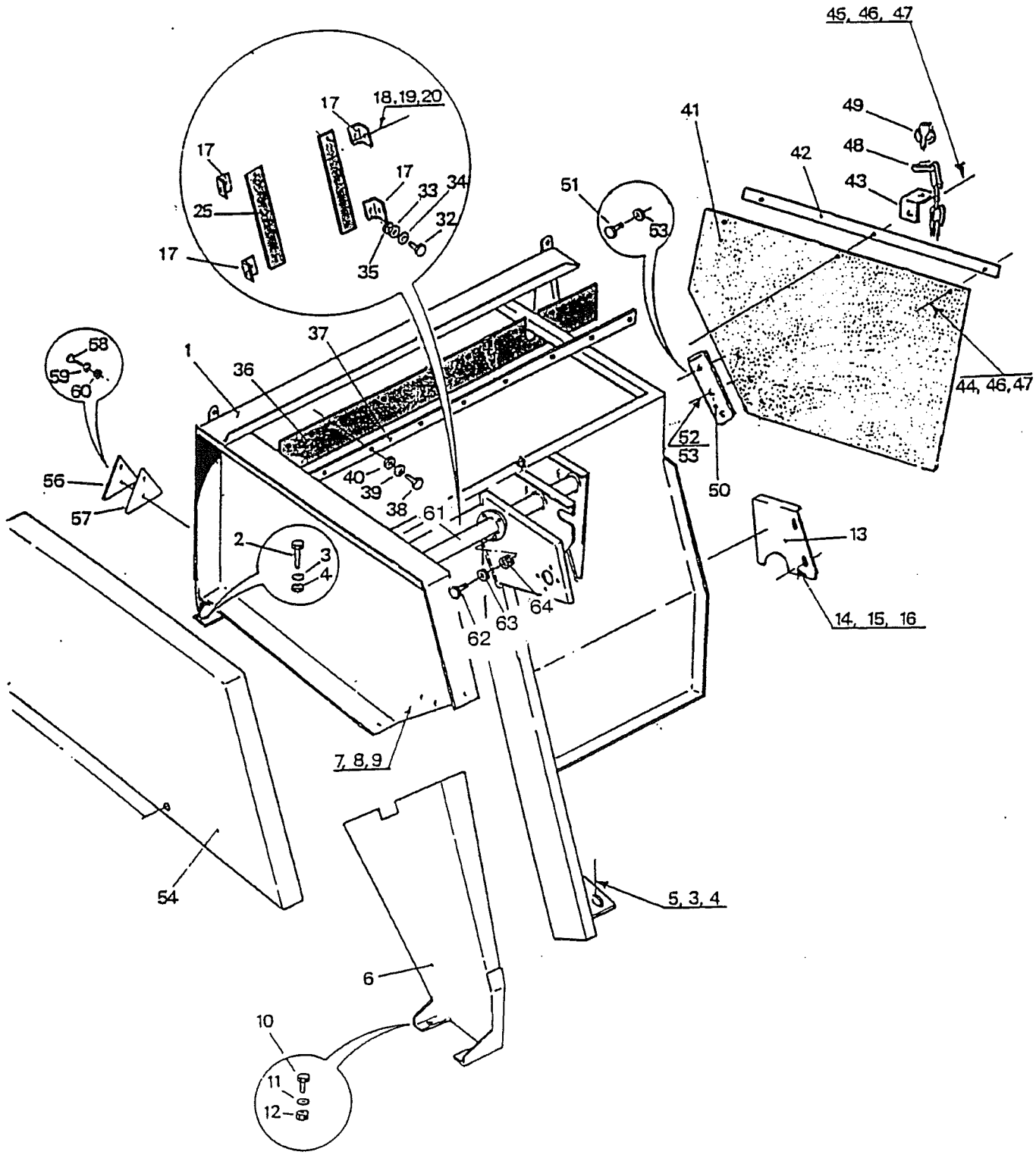
45, 46, 47
49
48
43
42
41
18,19,20
17
17
17
17
25
33
34
32
35
51
53
44, 46,47
58
59
60
1
36
37
56
57
40
39
38
61
52
53
50
13
2
3
4
64
63
62
14, 15, 16
7, 8,9
54
5, 3, 4
6
10
11
12

Item	Part no	**CLEANING UNIT**	Qty/unit
47	30969	Nut, hex M8	3
48	62170	Chain	1
49	40150	Linch pin D9	1
50	95625	Bracket	2
51	30985	Screw, hex M8x25	2
52	53408	Screw, hex M8x30	1
53	57550	Locking hex M8	3
54	95167	Chain guard	1
x	87115	Locking device	2
x	95304	Rivet 4,0x14 K 8 ST	10
x	13239	Handle	1
x	95303	Rivet 4,8x16 K 10 ST	4
56	53263	Warning triangle	1
57	53283	Support/warning triangle	1
58	85585	Screw, hex M6x20	2
59	10398	Spring washer M6	2
60	30261	Locking nut M6	2
61	95680	Tube	1
62	30958	Screw, hex M10x25	4
63	10607	Washer M10	4
64	57379	Nut, locking M10	4

Item marked x not shown.

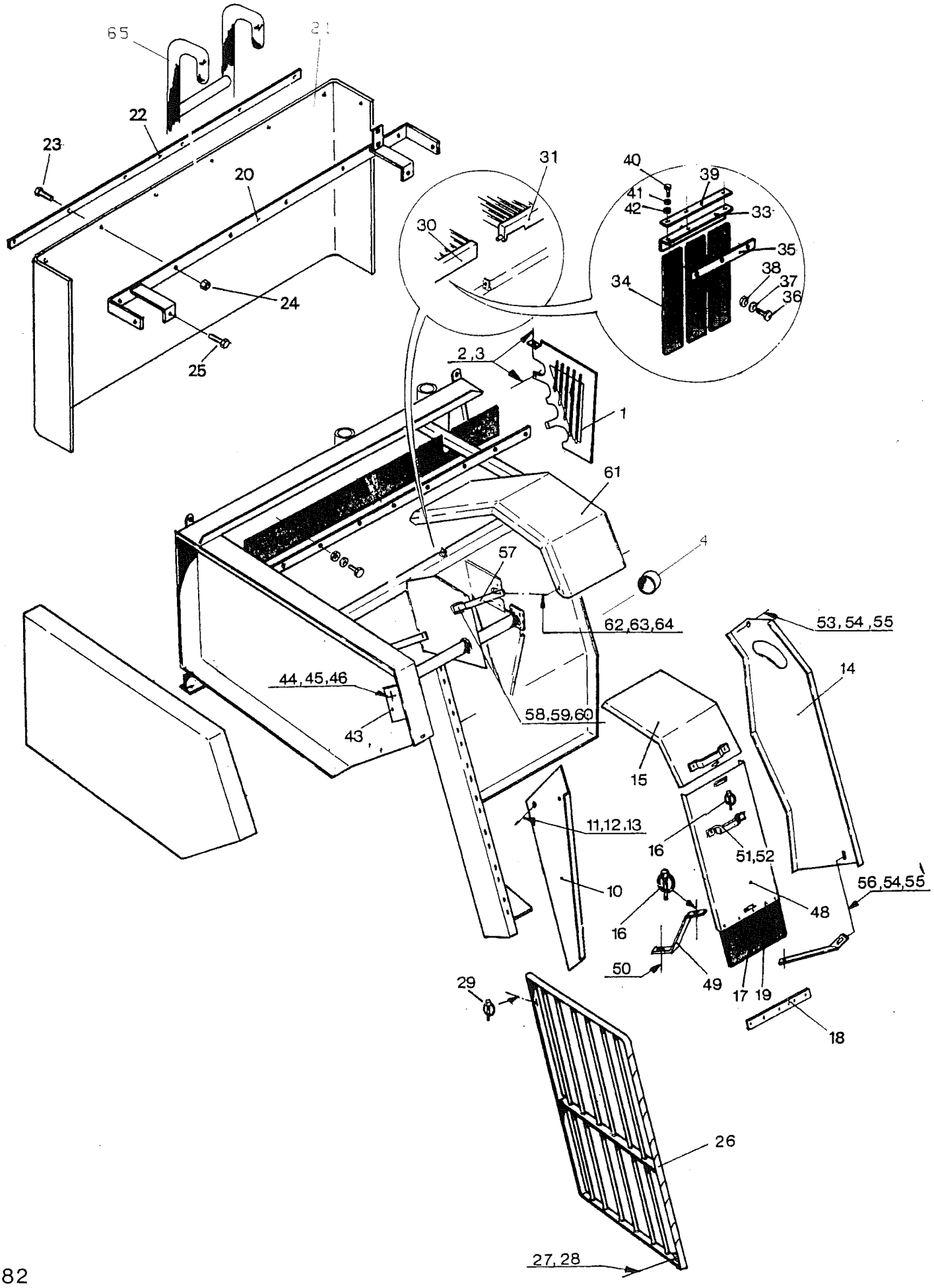
65
21
22
23
20
24
25
31
30
40
39
41
42
33
35
38
37
36
34
2,3
1
61
4
57
62,63,64
53,54,55
14
44,45,46
43
58,59,60
15
11,12,13
16
51,52
56,54,55
10
48
16
50
49
17
19
18
29
26
27,28

JUKO 100 **From serial number 9Y-40501**

Item	Part no	CLEANING UNIT	Qty/unit
1	95683	Guard	1
2	53363	Screw, hex M8x20	3
3	30969	Nut, hex M8	3
4	95679	Protecting cover	4
10	95165	Chain guard	1
x	57550	Locking nut M8	2
x	57537	Locking screw M8	2
x	10784	Washer M8	4
11	57538	Lock screw M10x20	3
12	10607	Washer M10	3
13	57379	Locking nut M10	3
14	95163	Chain guard	1
15	95164	Chain guard	1
16	40150	Lich pin D9	2
17	95170	Rubber sheet	1
18	95171	Bracket	1
19	95162	Rivet 4.8x20K16 Gesipa	4
	950187	**GUARD, assy**	1
20	95187	Fixing plate	1
21	95186	Rubber sheet	1
22	90173	Backing plate	1
23	57537	Lock screw M8x25	8
24	57550	Locking nut M8	8
x	90663	Slot bracket	1
x	63548	Lock screw M8x16	2
x	57550	Locking nut M8	2
25	30985	Screw, hex M8x25	2
26	95172	Guard rail	1
27	30887	Washer M16	1
28	53190	Locking nut M16	1
29	40150	Linch pin D9	1
30	95671	Lid, right	1
31	95672	Lid, left	1
x	30957	Screw, hex M10x30	2
x	57379	Locking nut M10	2
x	95188	Support/upper part	2
x	95189	Support/lower part	2
x	30985	Screw, hex M8x25	6
x	10784	Washer M8	6
x	57550	Locking nut M8	6

Item marked x not shown.

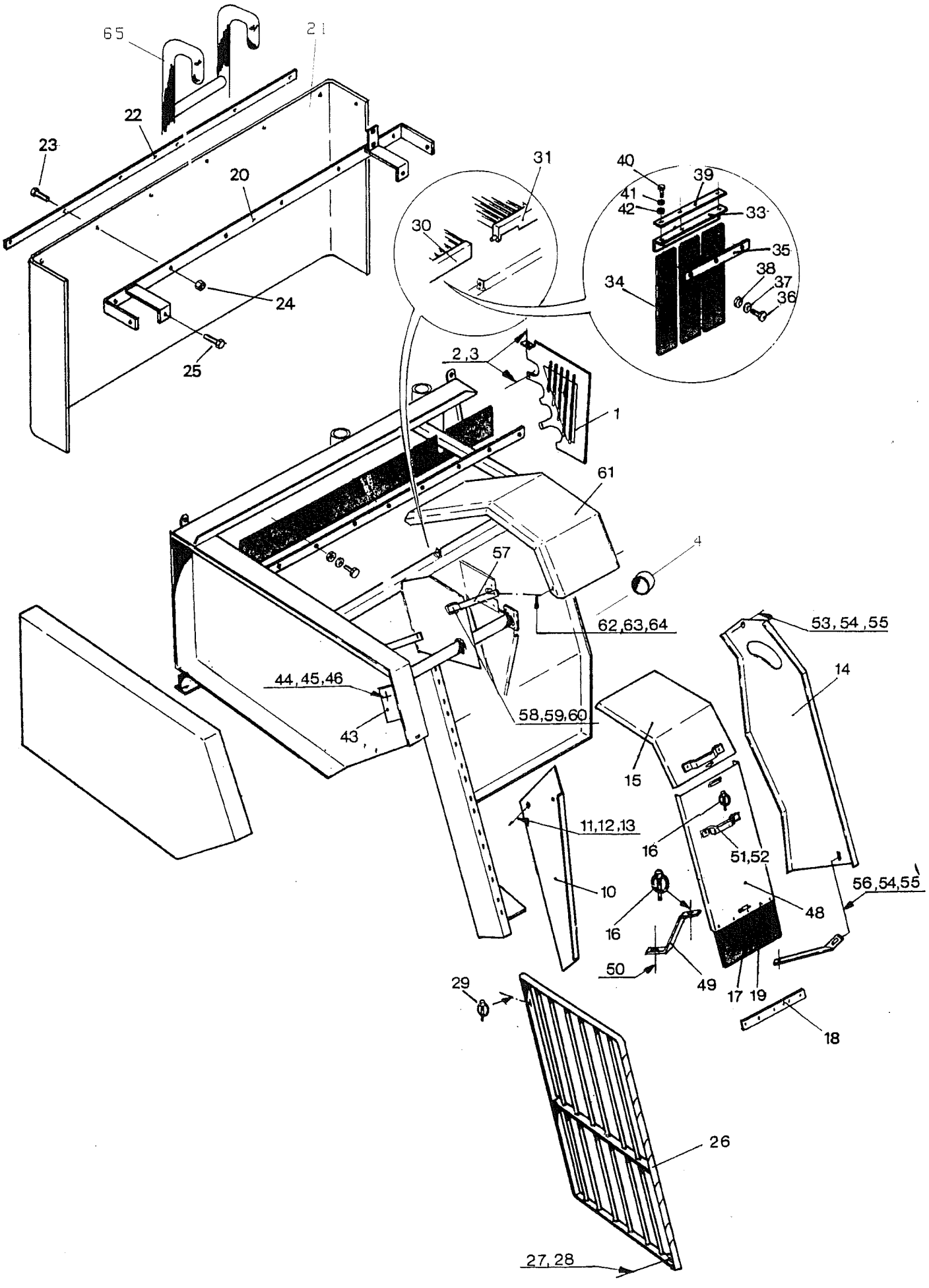
65
21
22
23
20
24
25
31
30
40
39
41
42
33
35
38
37
36
34
2,3
1
61
4
57
62,63,64
53,54,55
14
44,45,46
43
58,59,60
15
11,12,13
16
51,52
10
56,54,55
48
16
50
49
17
19
18
29
26
27,28

Item	Part no	CLEANING UNIT	Qty/unit
33	95619	Bracket plate	1
34	95620	Rubber sheet	3
35	95621	Washer	1
36	30985	Screw, hex M8x25	3
37	10784	Washer M8	3
38	30969	Nut, hex M8	3
39	95622	Washer	1
40	66134	Screw, hex M8x40	3
41	10784	Washer M8	3
42	30969	Nut, hex M8	3
43	95624	Guard plate	1
44	30958	Screw, hex M10x25	2
45	10607	Washer M10	2
46	57379	Locking nut M10	2
48	95168	Guard plate	1
49	95192	Bracket bar	1
50	63135	Screw, hex M16x25	1
51	13239	Handle	2
52	95303	Rivet 4,8x16 K 10 ST	8
53	57535	Screw, hex M8x16	4
54	10350	Washer M8	5
55	30969	Nut, hex M8	5
56	53363	Screw, hex M8x20	1
57	95173	Bracket plate	2
58	57537	Lock screw M8x25	4
59	10784	Washer M8	4
60	57550	Locking nut M8	4
61	95174	Guard plate	1
62	57536	Lock screw M8x20	2
63	10784	Washer M8	2
64	57550	Locking nut M8	2
65	95196	Ladder	1
	900169	**WARNING TRIANGLE, assy**	
x	90169	Warning triangle	1
x	90168	Bracket plate	1
x	30257	Cross recessed pan head screw M6x16	2
x	30261	Lock nut M6	2
x	90663	Slot bracket	1
x	57536	Lock screw M8x20	2
x	57550	Locking nut M8	2

Item marked x not shown .

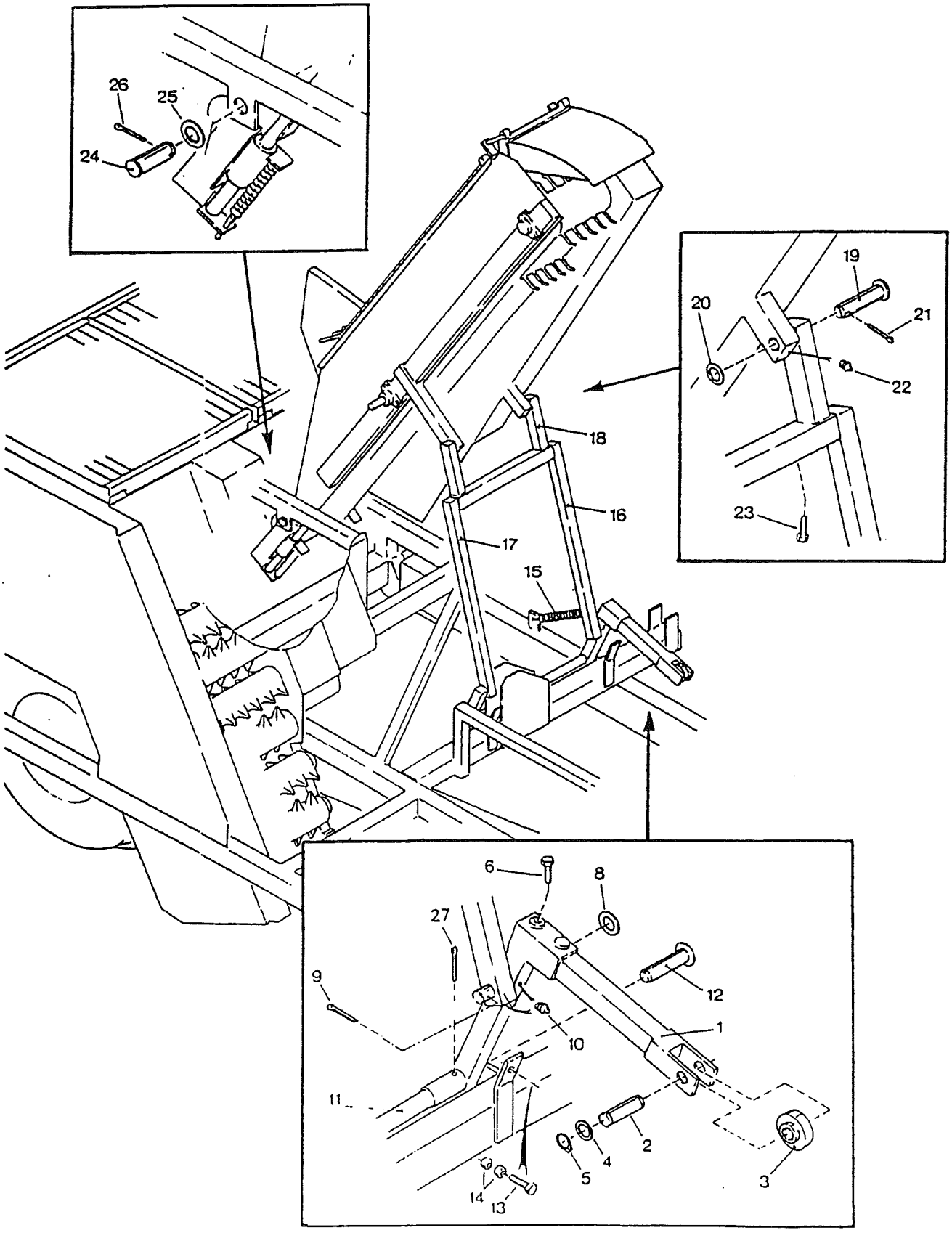
26
25
24
19
20
21
22
23
18
16
17
15
6
8
27
9
12
1
10
11
2
4
5
3
14
13

JUKO 100 **From serial number 9Y-40501**

Item	Part no	TANK ELEVATOR	Qty/unit
	950715	**LIFT ACTUATOR LEVER, assy**	1
1	95715	Actuator lever	1
2	90262	Axle	1
3	90720	Bearing YAR205-2F	1
4	52141	Washer 25,5x45x3	2
5	10525	Circlip 25x1,2	2
6	30949	Screw, hex M12x25	2
7	90260	Axle pin	2
8	52424	Washer 20,5x30x1	2
9	10459	Cotter pin 5x32	2
10	10761	Lubrication nipple M8	2
x	10784	Washer M8	2
11	95702	Lift/lower frame tube	1
12	90259	Axle pin	2
13	54534	Screw, hex M16x120	2
14	30124	Nut, hex M16	4
15	52402	Tension spring	1
16	90718	Connecting bar/left	1
17	90719	Connecting bar/right	1
18	95708	Lift/upper part	1
19	90260	Axle pin	2
20	52424	Washer 20,5x30x1	2
21	10459	Cotter pin 5x32	2
22	30264	Lubrication nipple M8, angle	4
x	10784	Washer M8	4
23	30949	Screw, hex M12x25	4
24	95707	Axle	1
25	30930	Washer 31,5x5C;4	2
26	57241	Cotter pin 6,3x45	2
27	10624	Cotter pin 5x40	2
	950678	**GUIDE, assy**	
x	95678	Attachment piece	1
x	88613	Rubber shaft	4
x	88612	Locking plate	2
x	88619	Fixing plate	1
x	30949	Screw, hex M12x25	9
x	10462	Washer M12	9
x	56448	Nut, locking M12	9

Item marked x not shown.

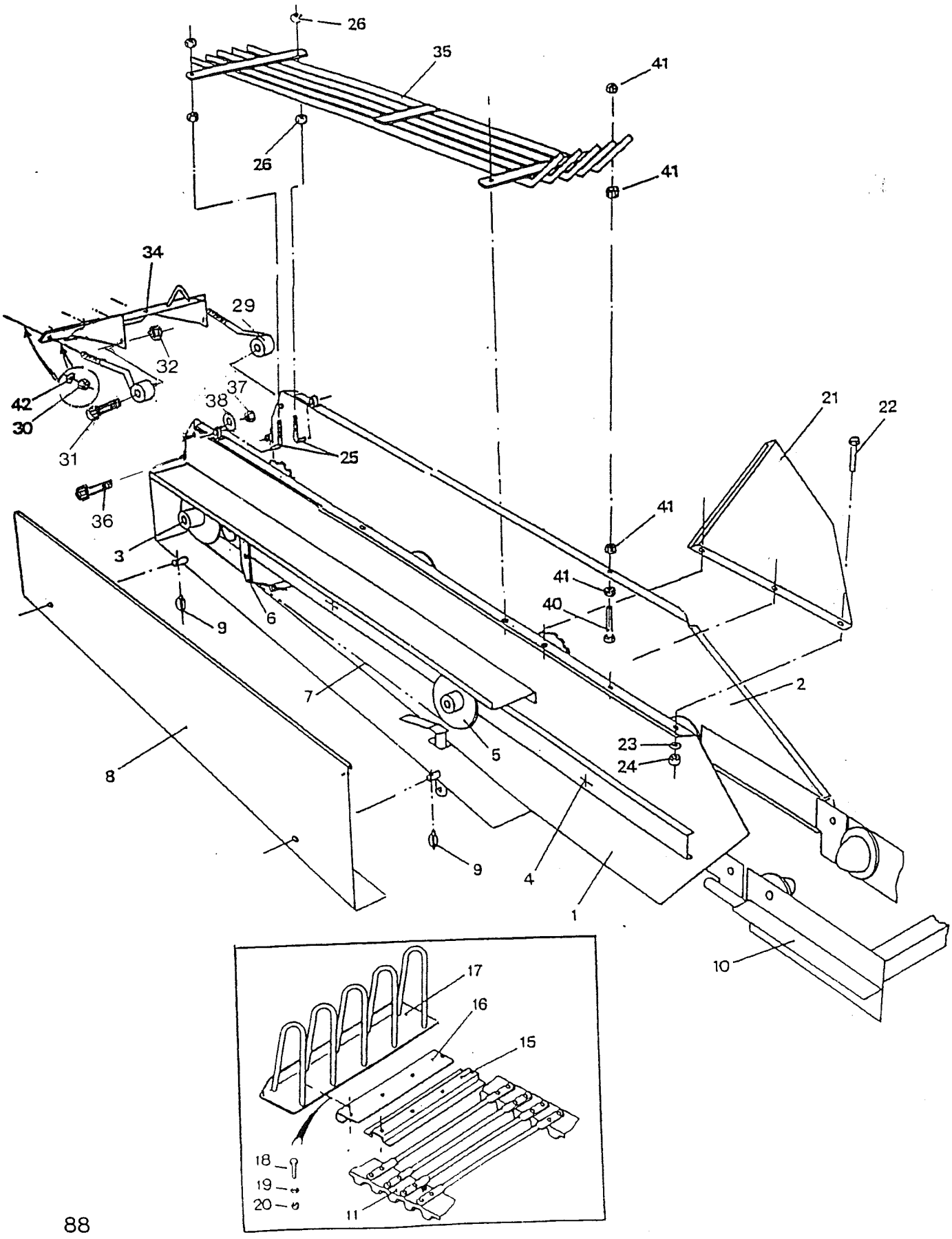
26
35
41
26
41
34
29
32
42
30
31
37
38
25
21
22
36
41
3
41
40
9
6
7
2
5
23
24
8
9
4
1
10
17
16
15
18
19
20
11

Item	Part no	TANK ELEVATOR	Qty/unit
1	90740	Side plate/left	1
2	90739	Side plate/right	1
3	950719	Drive shaft	1
4	870705	Axle/supporting roller	2
5	95709	Power transmission shaft	1
6	570563	Chain tightener	1
7		Roller chain 5/8x3/8-192 links	1
8	90174	Chain guard	1
9	40150	Linch pin D9	2
10	870707	Frame/supporting rollers	2
11	**950720**	**ELEVATOR WEB, assy**	**1**
x	95721	Cogged belt Z=107/50	2
x	87708	Rod	107
x	58328	Washer	214
x	57398	Nit 6x17	428
15	95717	Attaching plate	15
16	95718	Attaching plate	15
17	95714	Elevator rake	15
18	53363	Screw, hex. M 8x20	60
19	10784	Washer M 8	60
20	57550	Nut, hex. M 8 with nylon insert	60
21	95706	Side plate	1
22	57535	Screw, hex. M 8x16	3
23	10784	Washer M 8	3
24	57550	Nut, hex. M 8 with nylon insert	3
25	87720	Adjusting screw	2
26	30124	Nut, hex. M 16	4
29	95713	Adjusting screw	2
30	30124	Nut, hex. M 16	4
31	30949	Screw, hex. M 12x25	2
32	56448	Nut, hex. M 12 with nylon insert	2
34	87726	Guide frame	1
35	87719	Lid	1
x	87727	Washer	1
36	163925	Screw, hex M16x90	2
37	53190	Nut, locking M16	2
38	30887	Washer M16	2
40	55863	Screw, hex. M 10x100	2
41	10760	Nut, hex. M 10	8
42	30887	Washer M16	4
x	95670	Support leg	1
x	30522	Screw, hex M12x35	2
x	10462	Washer M12	4
x	30968	Nut, hex. M12	2

Item marked x not shown.

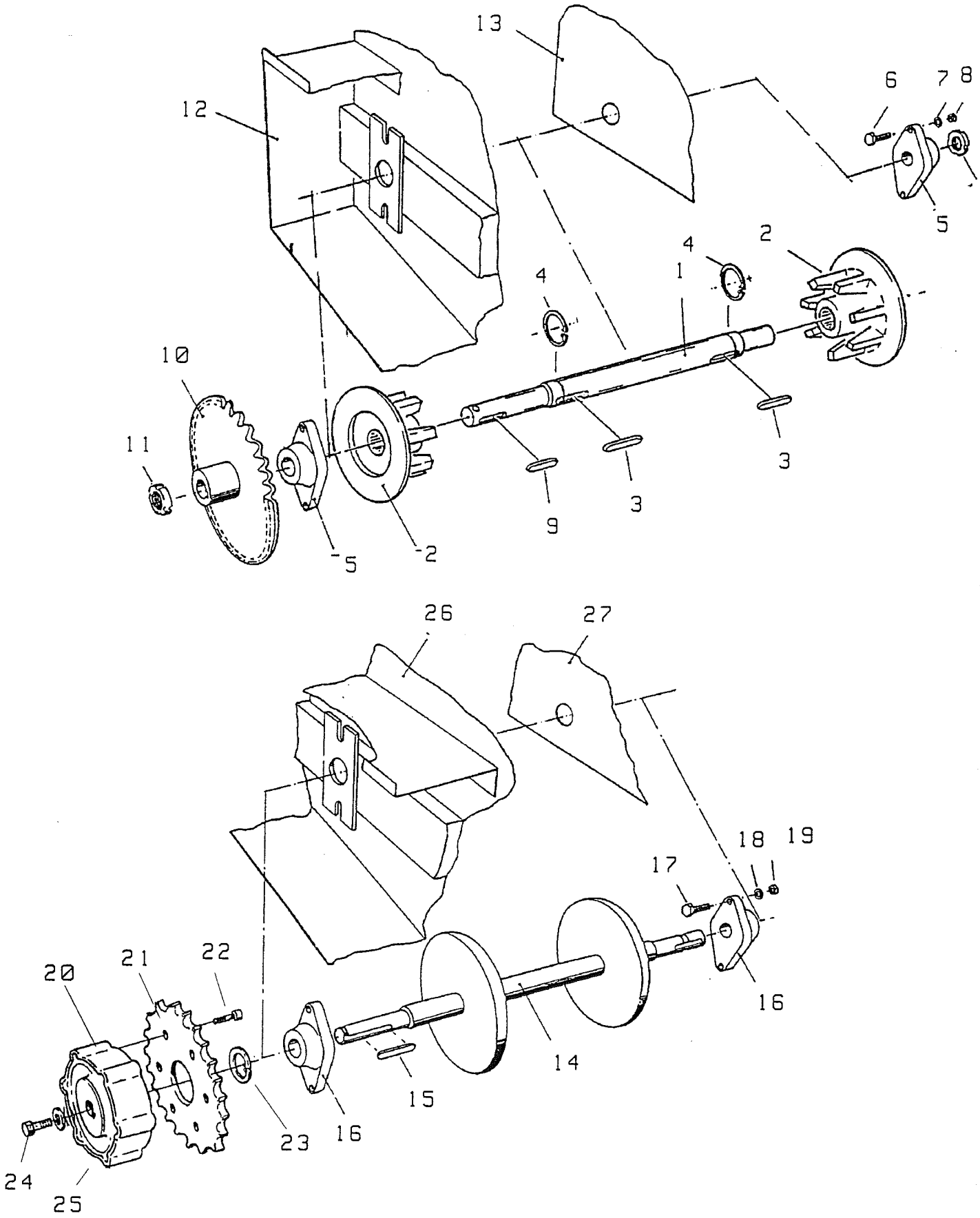
13
12
6
7
8
5
4
2
4
1
10
11
3
9
3
5
2
26
27
18
19
17
20
21
22
16
14
15
16
23
24
25

Item	Part no	TANK ELEVATOR	Qty/unit
	950719	**DRIVE SHAFT, assy**	
1	87706	Drive shaft	1
2	95719	Drive wheel	2
3		Key 8x7x63	2
4	63535	Circlip A35x1,5	2
5	57187	Collar step bearing FYTB 25 TF	2
6	30957	Screw, hex. M 10x30	8
7	10607	Washer M 10	8
8	57379	Nut, hex. M 10 with nylon insert	8
9		Key 8x7x40	1
10	90713	Sprocket 36 T, t=15,875	1
11	30186	Slotted round nut for hook spanner KM 5	2
x	56170	Securing washer MB 5	2
12	90740	Side plate/left	1
13	90739	Side plate/right	1
14	95709	Power transmission shaft	1
15		Key 8x7x40	1
16	57187	Collar step bearing FY TB 25TF	2
17	30957	Screw, hex M10x30	4
18	10607	Washer M10	4
19	57379	Locking nut M10	4
20	89717	Safety guard	1
21	95724	Sprocket 28 T, 15.875	1
22	89632	Screw M8x16	6
x	10784	Washer M8	6
23	87525	Ring Ø36x25,5-15	1
24	30985	Screw, hex M8x25	1
25	163517	Washer Ø8	1
26	90740	Side plate/left	
27	90739	Side plate/right	

Item marked x not shown.

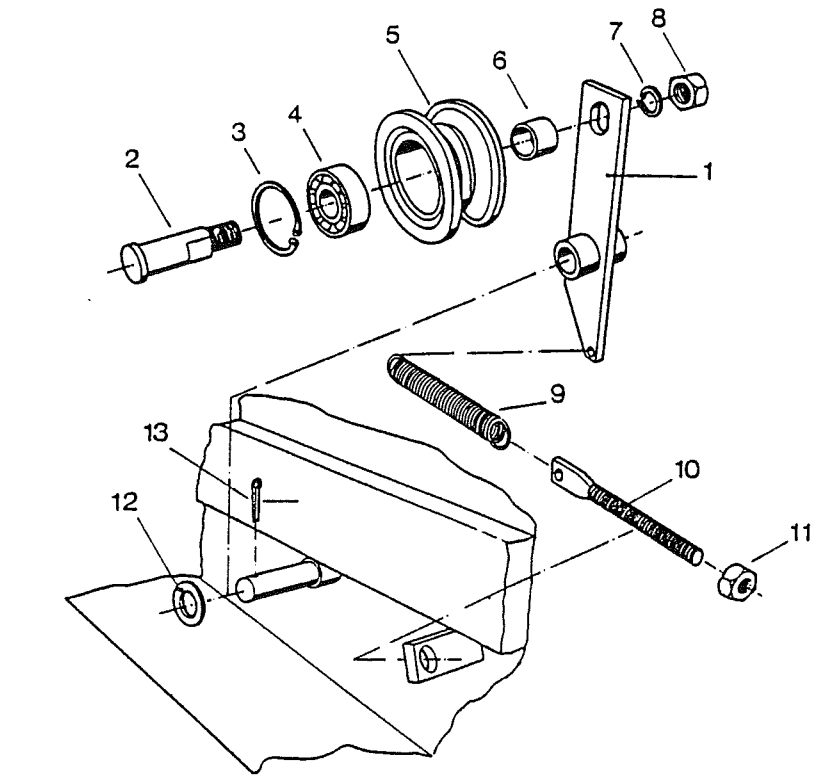
1
2
3
4
5
6
7
8
9
10
11
12
13

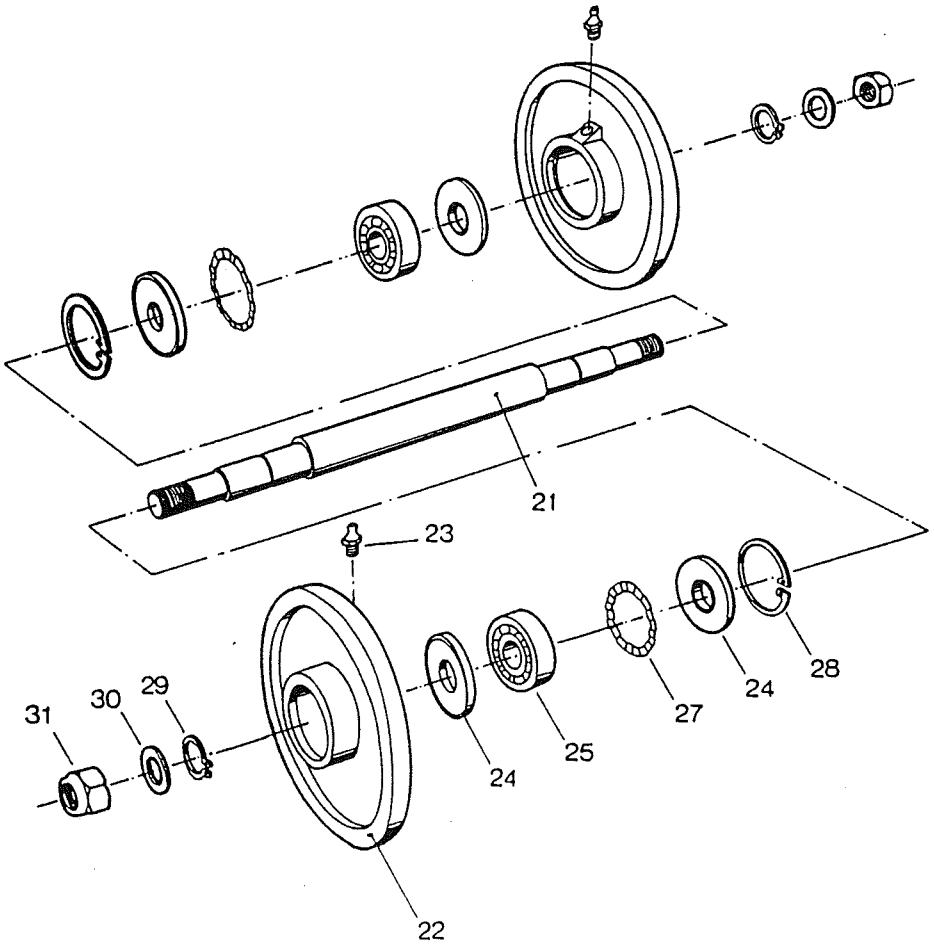
21
22
23
24
24
25
27
28
29
30
31

Item	Part no	TANK ELEVATOR	Qty/unit
	570563	**CHAIN TIGHTENER, assy**	
1	54583	Chain tightener	1
2	57595	Axle	1
3	53424	Circlip J47x1,75	1
4	63223	Bearing 6204 2RS	1
5	57563	Roller	1
6	57564	Tube	1
7	40151	Spring washer M16	1
8	30124	Nut, hex M16	1
9	52531	Tension spring	1
10	57445	Adjusting screw	1
11	10760	Nut, hex M10	2
12	10613	Washer 20,5x35x2	1
13	10459	Cotter pin 5x32	1
	870705	**AXLE/supporting rollers, assy**	
21	87705	Axle	1
22	53777	Supporting roller	2
23	30263	Lubrication nipple M6	2
24	52422	Seal Z304	4
25	52423	Ball bearing SKF6304	2
27	52629	Corrugated washer ZW 52/42	2
28	52427	Circlip J52x2	2
x	52424	Washer 20,5x30x2	4
29	10838	Circlip A20x1,2	2
30	30887	Washer M16	2
31	53190	Locking nut M16	2

Item marked x not shown.

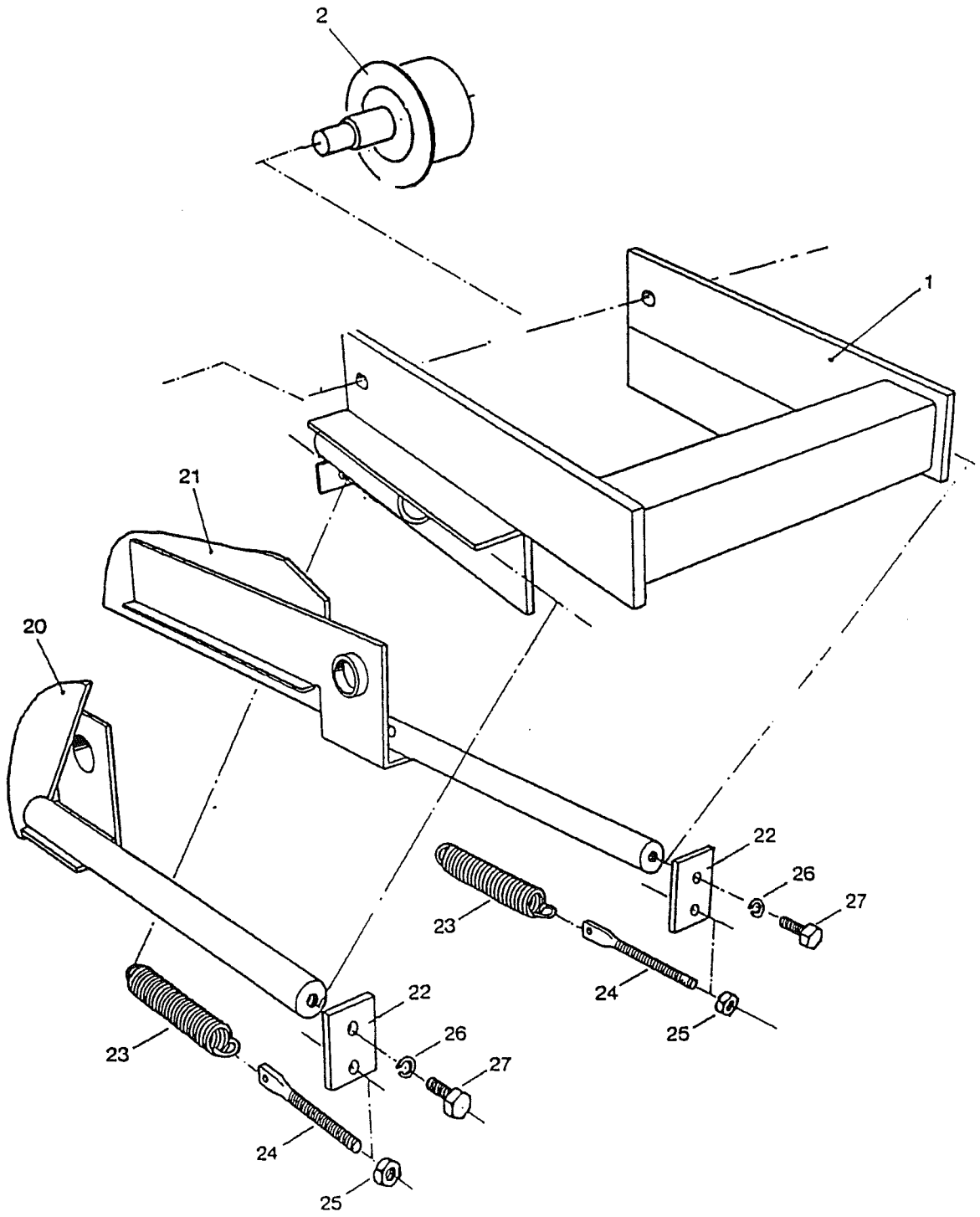
2
1
21
20
22
26
27
23
24
25
22
26
27
23
24
25

JUKO 100 **From serial number 9Y-40501**

Item	Part no	TANK ELEVATOR	Qty/unit
	870707	**FRAME, turning rollers, assy**	
1	87707	Frame	1
2	1570307	Turning roller,	2
x	10761	Lubrication nipple M8	2
20	90740	Side piece, left	
21	90739	Side piece, right	
22	90711	Washer 40x80-65	2
23	62181	Tension spring	2
24	57445	Adjusting screw	2
25	10760	Nut, hex M10	4
26	10153	Spring washer M10	2
27	30958	Screw, hex M10x25	2

Item marked x not shown.

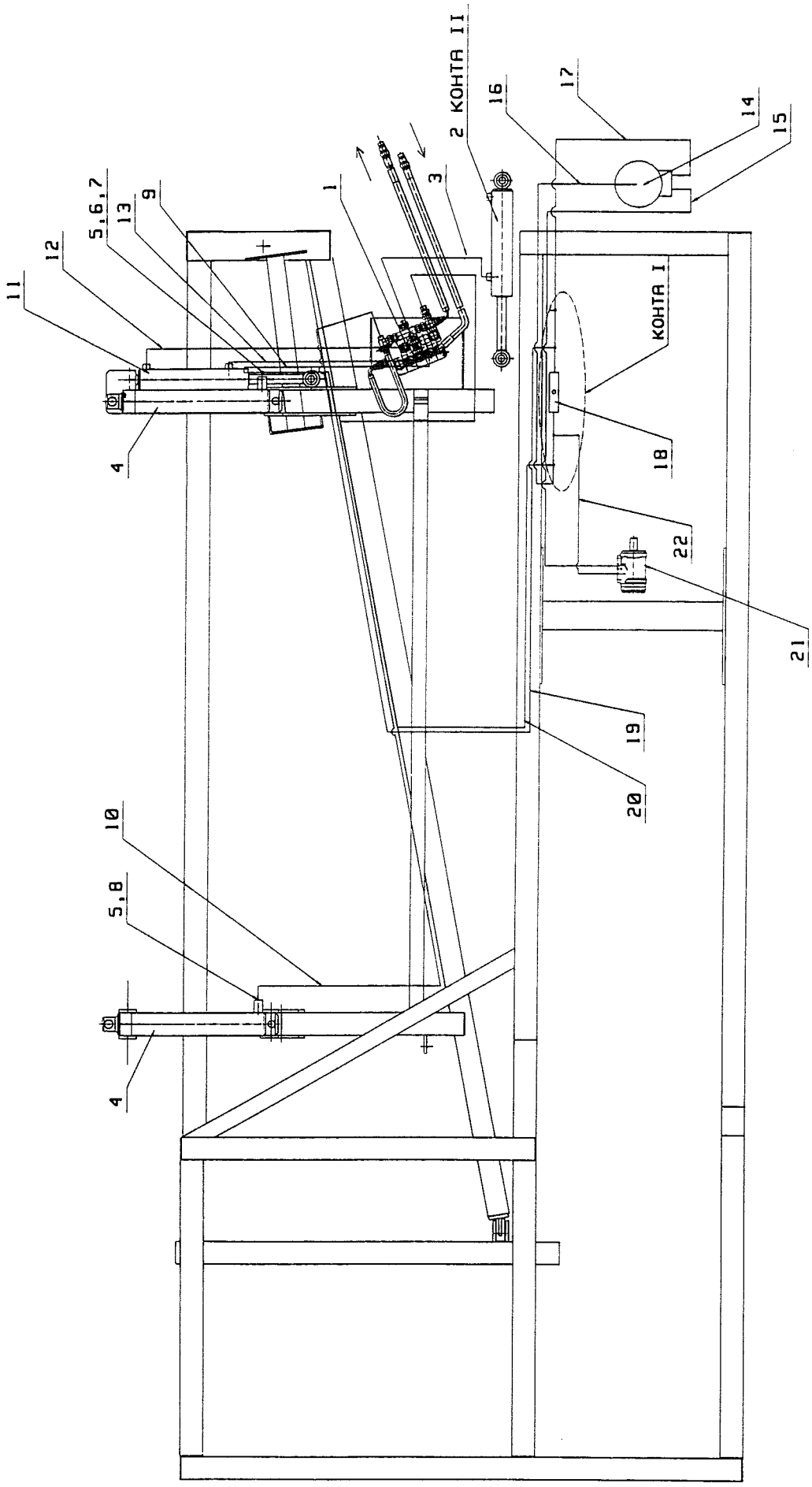
2 КОНТА II
16
17
14
15
1
3
5,6,7
13
9
12
11
4
КОНТА I
18
22
21
19
20
10
5,8
4

95080IVK

JUKO 100 **From serial number** **6100-5102**
6200-6101
6300-6121

Item	Part no	HYDRAULICS	Qty/unit
1	**950851**	**PILOT VALVE**	**1**
		POINT II	
2	**950805**	**LIFTING FRAME RAM**	**1**
3	87820	Pressure hose l=2000 ½"	1
4	**870801**	**TANK TILTING RAM/FRONT**	**2**
5	52360	Seal	2
6	58644	Adaptor male/female R1/2"	1
7	58643	Adaptor male Tee R½"	1
8	54826	Adaptor male/male R1/2"	1
9	54864	Pressure hose l=460 ½"	1
10	90807	Pressure hose l=2600 ½"	1
11	**580660**	**HYDRAULIC RAM**	**1**
12	90823	Pressure hose l=1200 1/4"	1
13	90824	Pressure hose l=950 1/4"	1
14	**900550**	**PRETOPPER**	**1**
15	59881	Pressure hose l=2500 ½"	1
16	90823	Pressure hose l=1200 1/4"	1
17	87824	Pressure hose l=900 ½"	1
		POINT I	
18	**950834**	**DIRECTIONAL VALVE**	**1**
19	58648	Pressure hose l=2600 ½"	1
20	90813	Pressure hose l=2600 ½"	1
21	**900518**	**FLIPPER UNIT**	**1**
22	95849	Pressure hose l=1750 ½"	1

Item marked x not shown.

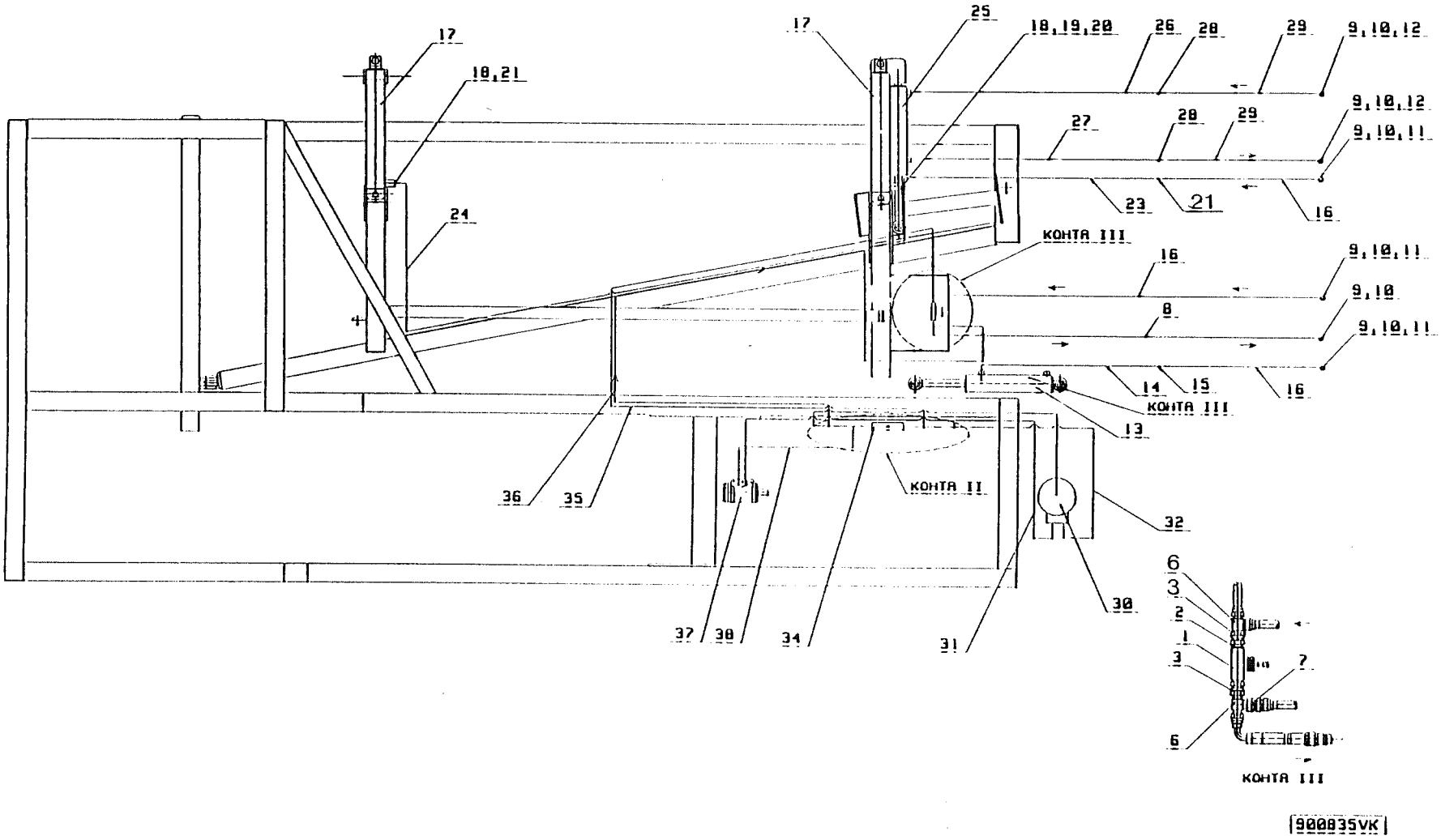
17
18,21
24
17
25
18,19,20
26
28
29
9,10,12
27
28
29
9,10,12
9,10,11
23
21
16
КОНТА III
16
9,10,11
9,10
8
9,10,11
14
15
16
КОНТА III
13
КОНТА II
36
35
32
37
38
34
31
30
6
3
2
1
3
7
6
КОНТА III
900835VK

Item	Part no	HYDRAULIC	Qty/unit
1	58899	Counter flow valve 9F-800S	1
2	52361	Usit-seal 21.5x28.6x2,5	2
3	58644	Adaptor male/female R1/2"	2
6	58643	Adaptor male Tee 1/2"	2
8	58632	Pressure hose l=3500 3/4"	1
9	30844	Rapid connector C-23072-08	6
10	58656	Guard	6
12	90820	Adaptor male/male R1/4"-R1/4"	2
		POINT II	
13	**950805**	**LIFTING FRAME RAM**	**1**
14	66650	Pressure hose l=2000 ½"	1
15	58644	Adaptor male/female R½"	1
16	263809	Pressure hose l=3500 ½"	3
17	**870801**	**TANK TILTING RAM**	**2**
18	52360	Seal Cu 21x28x1.5	2
19	58644	Adaptor male/female R1/2"	1
20	58643	Adaptor male Tee R½"	1
21	54826	Adaptor male R3/8"-R1/2"	2
23	54864	Pressure hose l=460 ½"	1
24	90807	Pressure hose l=2600 ½"	1
25	**580660**	**STEERING RAM**	**1**
26	90823	Pressure hose l=1200 1/4"	1
27	90824	Pressure hose l=950 1/4"	1
28	90820	Adaptor male/male R1/4"-R1/4"	2
29	90838	Pressure hose l=3500 1/4"	2
30	**900550**	**PRETOPPER**	**1**
31	59881	Pressure hose l=2500 ½"	1
32	87824	Pressure hose l=900 ½"	1
33	90823	Pressure hose l=1200 1/4"	1
		POINT I	
34	**950834**	**DIRECTIONAL VALVE, assy**	**1**
35	58648	Pressure hose l=2600 ½"	1
36	90813	Pressure hose l=2600 ½"	1
37	**900518**	**FLIPPER UNIT**	**1**
38	95849	Pressure hose l=1750 ½"	1

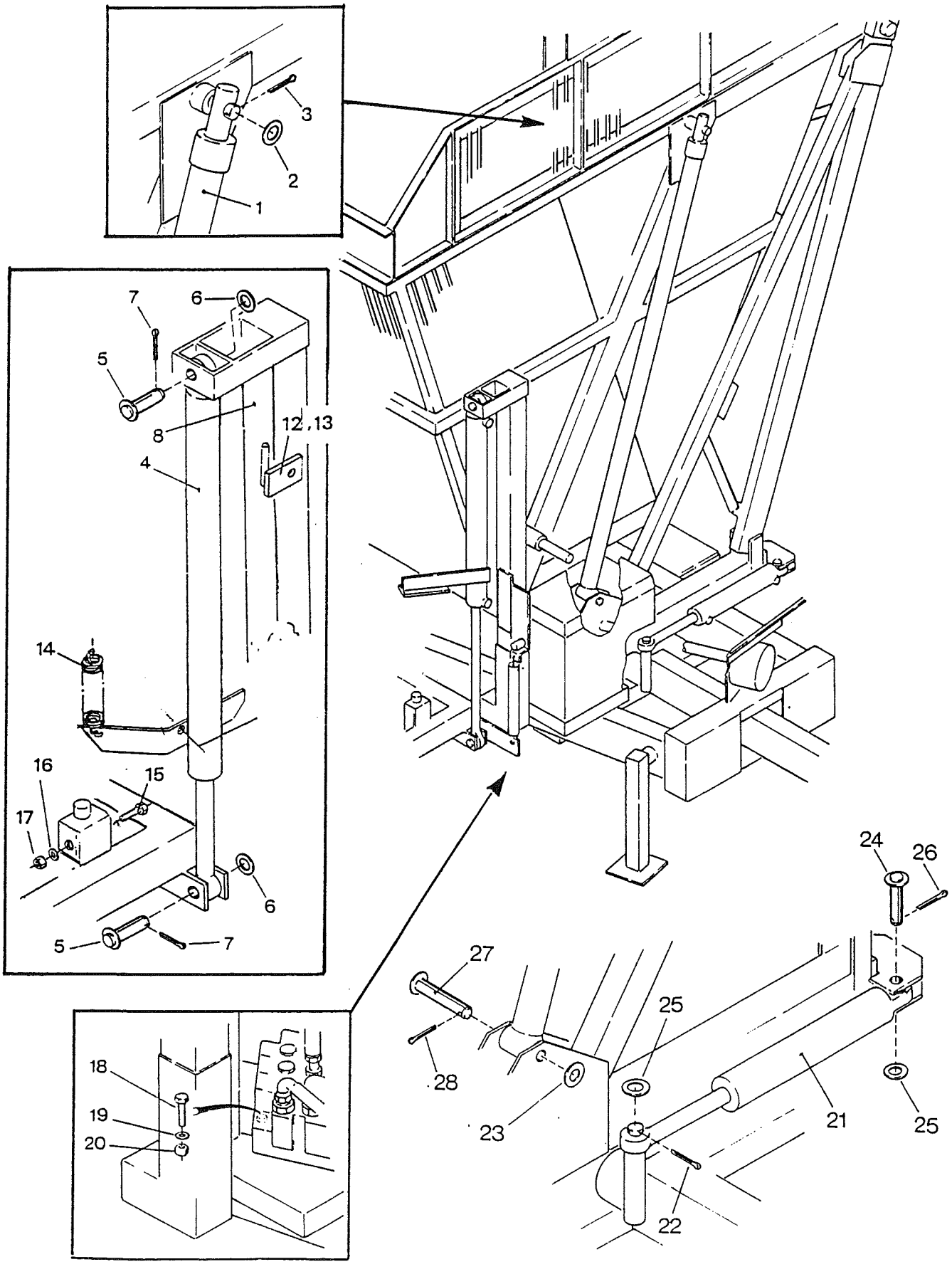
1
2
3
4
5
6
7
8
12,13
14
15
16
17
18
19
20
21
22
23
24
25
26
27
28

JUKO 100 **From serial number** **6100-5102**
6200-6101
6300-6121

Item	Part no	HYDRAULICS	Qty/unit
1	**870801**	**TANK TILTING RAM/FRONT**	**2**
2	30930	Washer 31,5x50x4	2
3	57241	Cotter pin 6,3x45	2
4	**950805**	**LIFTING FRAME RAM**	**1**
5	95109	Knuckle pin	2
6	56625	Washer 25,5x35x2	2
7	10624	Cotter pin 5x40	2
8	95406	Support	1
12	95809	Bracket	1
13	53363	Screw, hex M8x20	1
14	60176	Spring	1
x	30985	Screw, hex M8x25	1
x	10784	Washer M8	1
x	57550	Locking nut M8	1
x		Roller chain 5/8"x3/8"-18 l	1
x	87816	Screw, hex. countersank hed M6x25	1
x	53503	Washer M6	2
x	30261	Locking nut M6	1
15	30252	Screw, hex M8x60	2
16	10784	Washer M8	2
17	57550	Locking nut M8	2
18	53953	Screw, hex M10x70	3
19	10607	Washer M10	3
20	10760	Nut, hex M10	3
21	**900823**	**STEERING RAM**	**1**
22	30195	Cotter pin 5x50	1
23	56625	Washer 25,5x35x2	2
24	90256	Axle pin	1
25	56625	Washer 25,5x35x2	2
26	57241	Cotter pin 6,3x45	1
27	90255	Axle pin	2
28	57241	Cotter pin 6,3x45	2
x	95439	Handle	4
x	95440	Lid	4
x	42882	Screw 5.5x25	

Item marked x not shown.

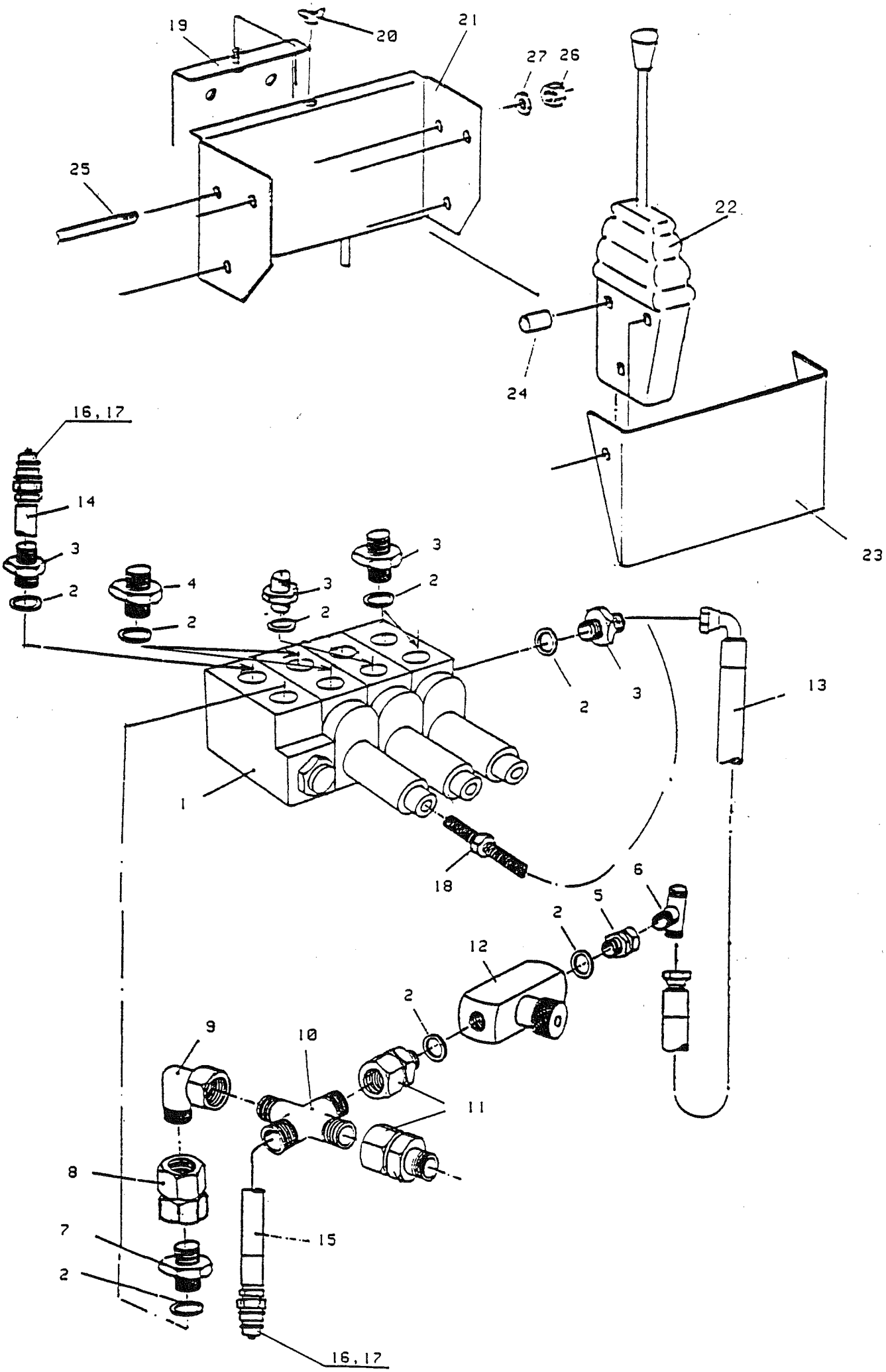
19
20
21
27
26
25
22
24
23
16, 17
14
3
2
4
3
2
3
2
2
3
2
13
1
18
6
5
2
12
2
9
10
11
8
7
2
15
16, 17

Rotec Valves

J95844 Valve for Shares

J95843 valve for Tank

This valve detents = move lever and the lever stays in position.
(It can be identified by having 1 red cap and the cap on the end is larger than on the other valves)

J95845 Valve for Steering only

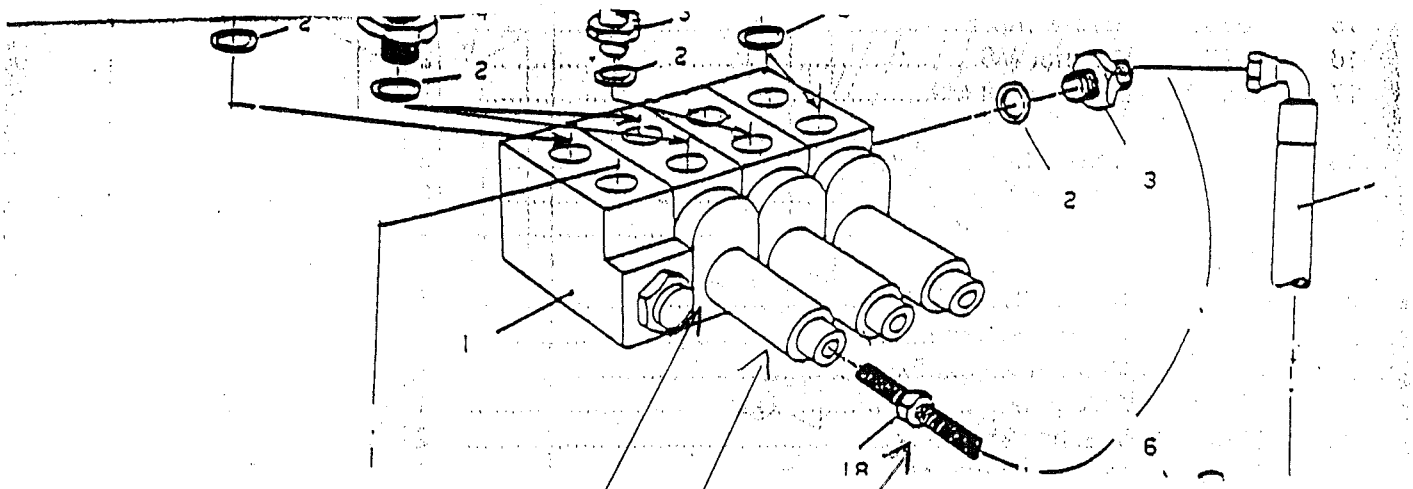

J95839 Plate

J95838 Connector

J95816 Cable

JUKO 100 **From serial number** **6100-5102**
6200-6101
6300-6121

Item	Part no	HYDRAULICS	Qty/unit
	950851	**PILOT VALVE, assy**	**1**
1	57677	Steering ram Commercial	1
x	53953	Screw, hex M10x60	3
x	10607	Spring washer M10	3
x	10760	Nut, hex M10	3
2	52361	Seal Usit 21x28x2,5	9
3	54826	Adaptor male R½	4
4	90812	Adaptor male/male R½ / R1/4	2
5	58644	Adaptor male/female R½"	1
6	58643	Adaptor male Tee R½"	1
7	57644	Adaptor male/male R3/4"-R½"	1
8	93828	Adaptor male/female swivel R3/4"	1
9	86824	Adaptor 90 elbow male/female R 3/4"	1
10	58637	Adaptor 4 way, male R 3/4"	1
11	58649	Adaptor male/female swivel R 1/2	2
12	58899	Counter flow valve 9 F-800-S Parker	1
13	54864	Pressure hose l=460 (½")	1
14	58633	Pressure hose l=3500 (½")	1
15	58632	Pressure hose l=3500 (3/4")	1
16	30844	Rapid connector C-23072-08	2
17	58656	Guard C-26914-08	2
18	95816	Control cable Morse L=3,5 m	3
19	58605	Bracket/remote control unit	1
20	30995	Wing nut M10	1
	950814	**REMOTE CONTROL UNIT, assy**	**1**
21	95814	Frame/remote control unit	1
22	95815	Control lever Morse	3
23	95821	Front plate	1
24	95822	Bush	6
25	95824	Bolt	3
26	30969	Nut, hex M8	6
27	10784	Washer M8	6

Item marked x not shown.

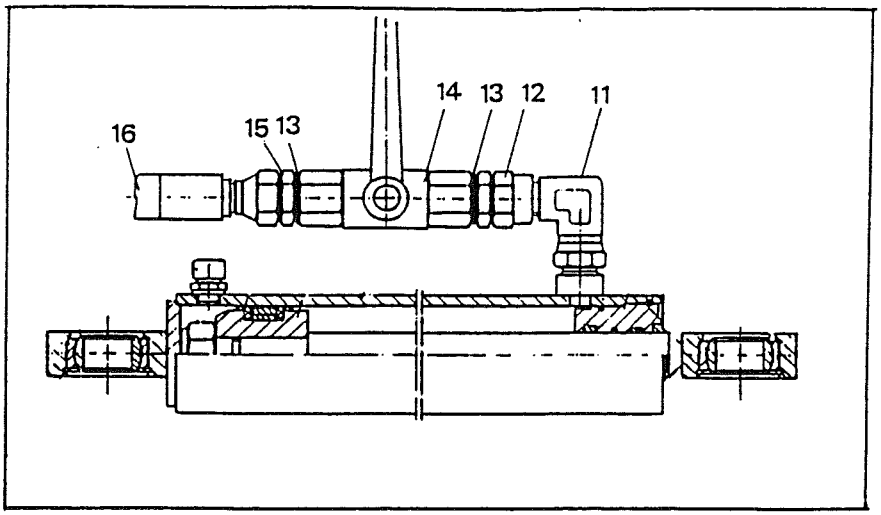

950 805

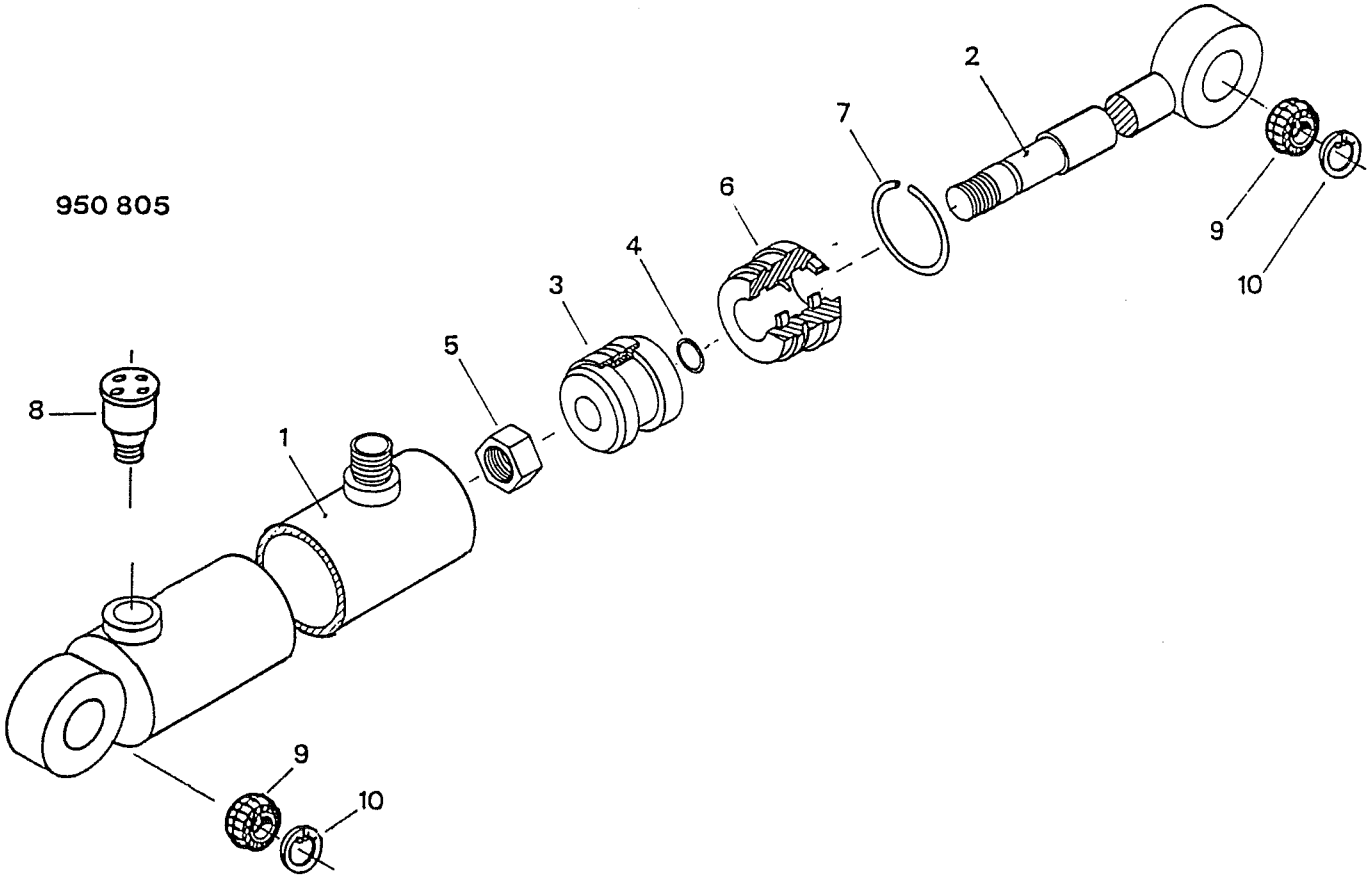

POINT I

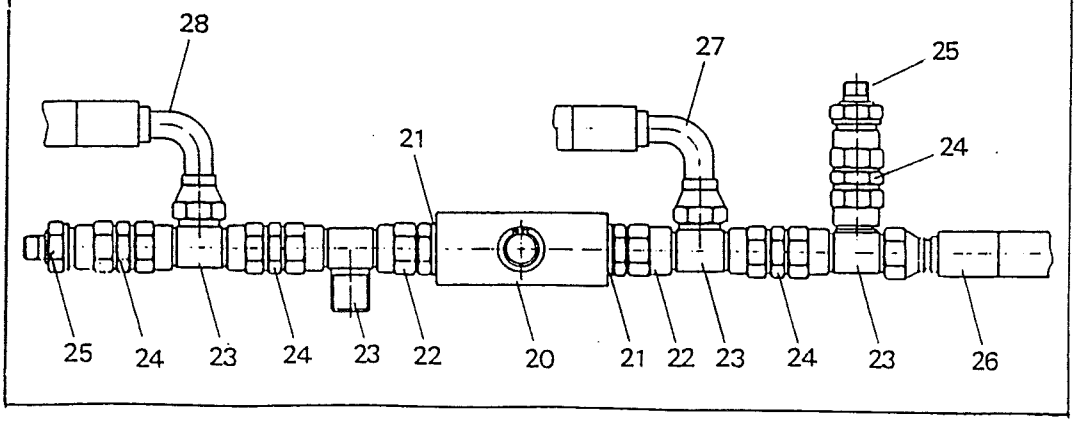

Item	Part no	HYDRAULIC	Qty/unit
	950805	**LIFTING FRAME RAM, assy**	
1	95804	Cylinder lining	1
2	95805	Piston barrel	1
3	310821	Piston	1
4	31810	O-ring OR 15,3x2,4	1
5	53463	Locking nut M20	1
6	580614	Cylinder head	1
7	30886	Locking ring	1
8	58658	Breather valve Mintor TSF-1/1/4	1
9	30831	Bearing Ge 25 ES	2
10	30830	Circlip J42x2	2
11	86818	Adaptor 90 elbow, male/female R ½"	1
12	58644	Adaptor male/female swivel R ½ "	1
13	52361	Usit-seal	2
14	30888	Ball valve 2T / R ½"	1
15	54826	Adaptor male/male R ½"	1
16	87820	Pressure hose l=2000 (½")	1
	POINT I	**DIRECTIONAL VALVE, assy**	**1**
20	950834	Directional valve	1
21	52360	Seal Cu 21x28x1,5	2
22	58644	Adaptor male/female swivel R ½	2
23	58643	Adaptor male Tee R ½"	3
24	58650	Adaptor/extension R ½"	2
25	90812	Adaptor male/male R 1/4/R½"	1
26	87824	Pressure hose l=900 (½")	1
27	58648	Pressure hose l=2600 (½")	1
28	90813	Pressure hose l=2600 (½")	1

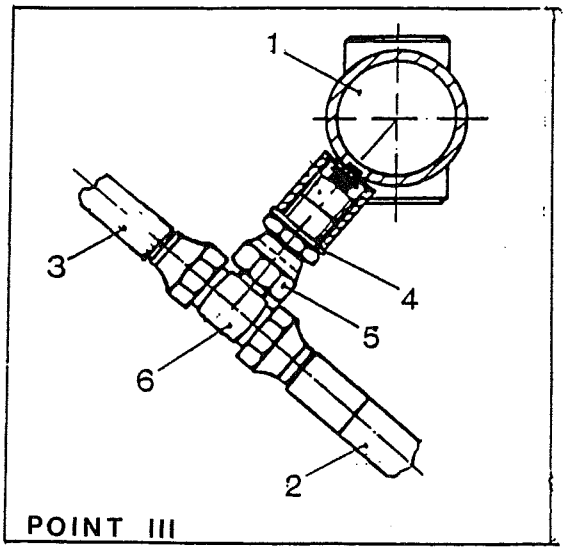

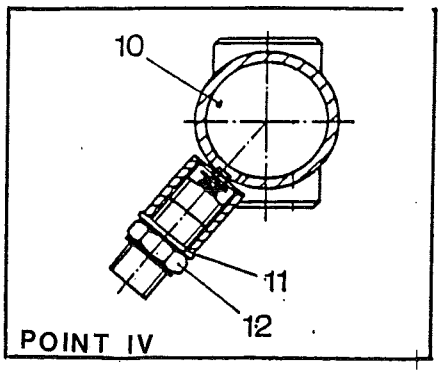

870801

580660

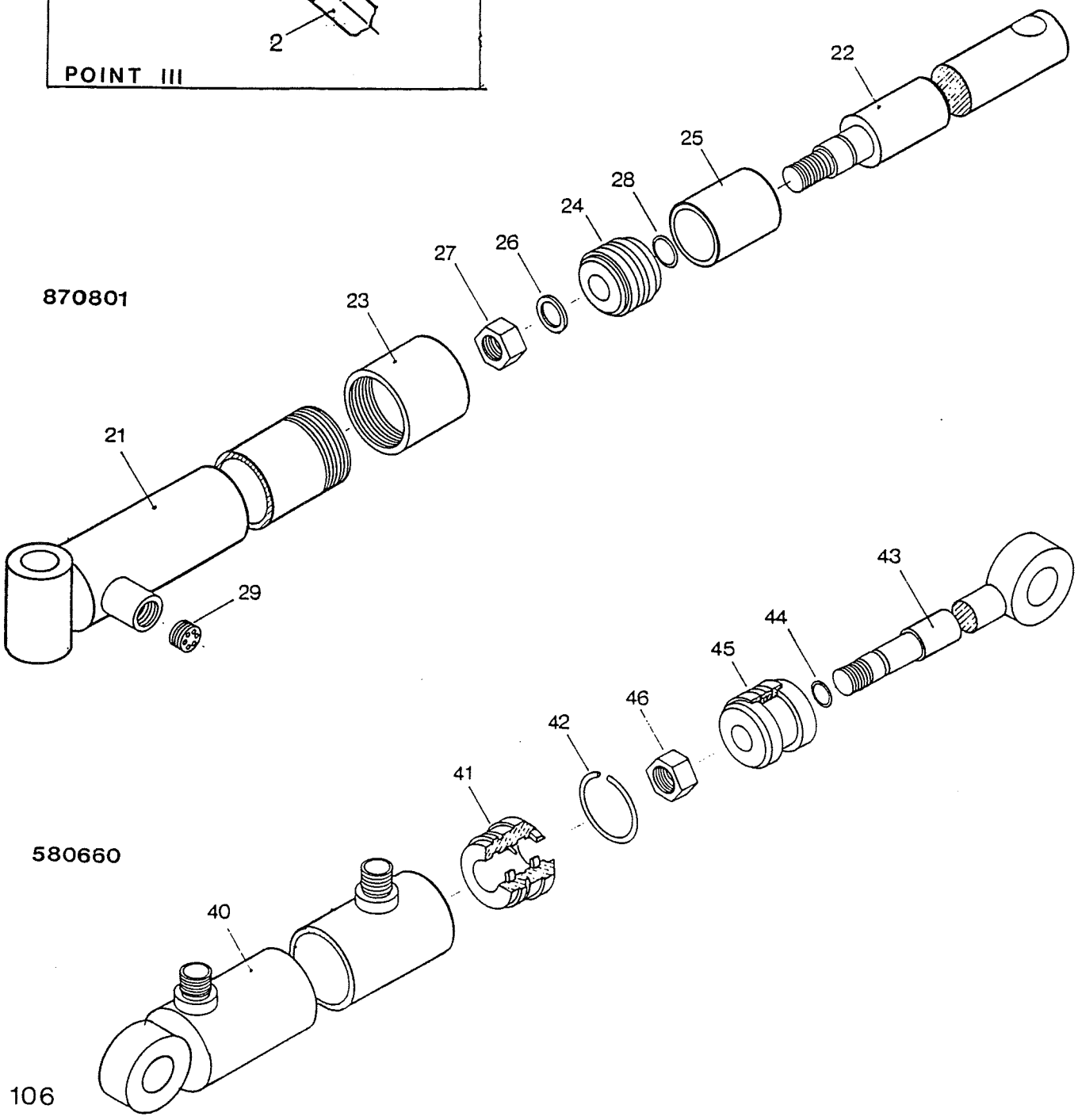

Item	Part no	HYDRAULIC	Qty/unit
	POINT III	**TANK TILTING RAM, FRONT, assy**	
1	870801	Hydraulic ram	1
2	54864	Pressure hose l=460 ½"	1
3	90807	Pressure hose l=2600 ½"	1
4	52360	Seal CU 21x28x1,5	1
5	58644	Adaptor, male/female R ½"	1
6	58643	Adaptor male Tee R ½"	1
	POINT IV	**TANK TILTING RAM, REAR, assy**	
10	870801	Hydraulic ram	1
11	52360	Seal Cu 21x28x1,5	1
12	54826	Adaptor maleR ½"	1
	870801	**HYDRAULIC RAM, assy**	
21	87800	Cylinder lining	1
22	87801	Piston barrel	1
23	86811	Nut	1
24	850806	Piston	1
25	85807	Limiter	1
x	40814	Plastic ring	1
x	86819	Seal Merkel P 7-50	1
26	30903	Washer M24	1
27	59593	Locking nut M24	1
28	85809	O-ring OR 29,2x3	1
29	86809	Safety valve Hawe LB 3 C-60	1
	580660	**HYDRAULIC RAM, assy**	
40	58660	Cylinder lining	1
41	580614	Cylinder head	1
42	30886	Locking ring	1
43	54811	Piston barrel	1
44	31810	O-ring OR 15,3x2,4	1
45	310821	Piston	1
46	53463	Locking nut M20	1

Item marked x not shown.

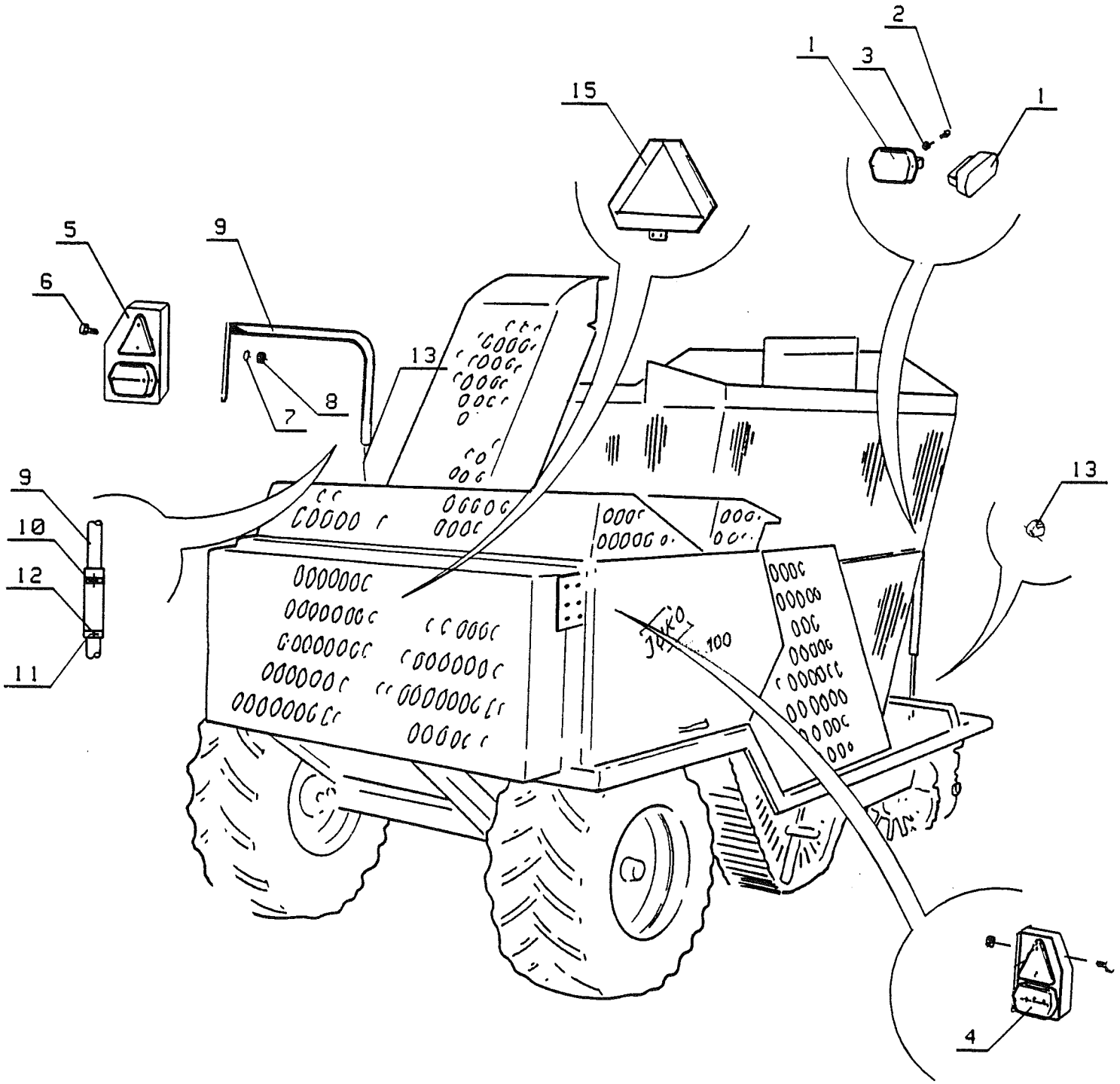
2
1
3
1
15
5
9
6
13
8
7
9
13
10
12
11
4

Item	Part no	LIGHT SET	Qty/unit
		WORKING LIGHT, SET	**1**
1	89917	Light, cleaning unit	1
x	89925	Plate	1
1	89916	Light, front	1
2	30949	Screw, hex M12x25	4
3	56448	Nut, locking M12	4
		REAR LIGHT, SET	
4	95967	Rear light, right	1
5	95973	Rear light, left	1
6	30528	Screw M5x16	8
7	63876	Spring washer M5	8
8	10395	Nut, hex M5	8
9	95968	Mounting bolt	1
10	57360	Screw	1
11	27208	Bush	1
12	30524	Screw M6x8	1
13	89915	Electric wire	1
		SOCKET, SET	
14	90998	Socket, set	1
15	**900169**	**WARNING TRIANGLE, assy**	
x	90169	Warning triangle	1
x	90168	Bracket plate	1
x	30257	Cross recessed pan head screw M6x16	2
x	30261	Lock nut M6	2
x	90663	Slot bracket	1
x	57536	Screw, locking M8x20	2
x	57550	Nut, locking M8	2

Item marked x not shown.

X-9112
6711

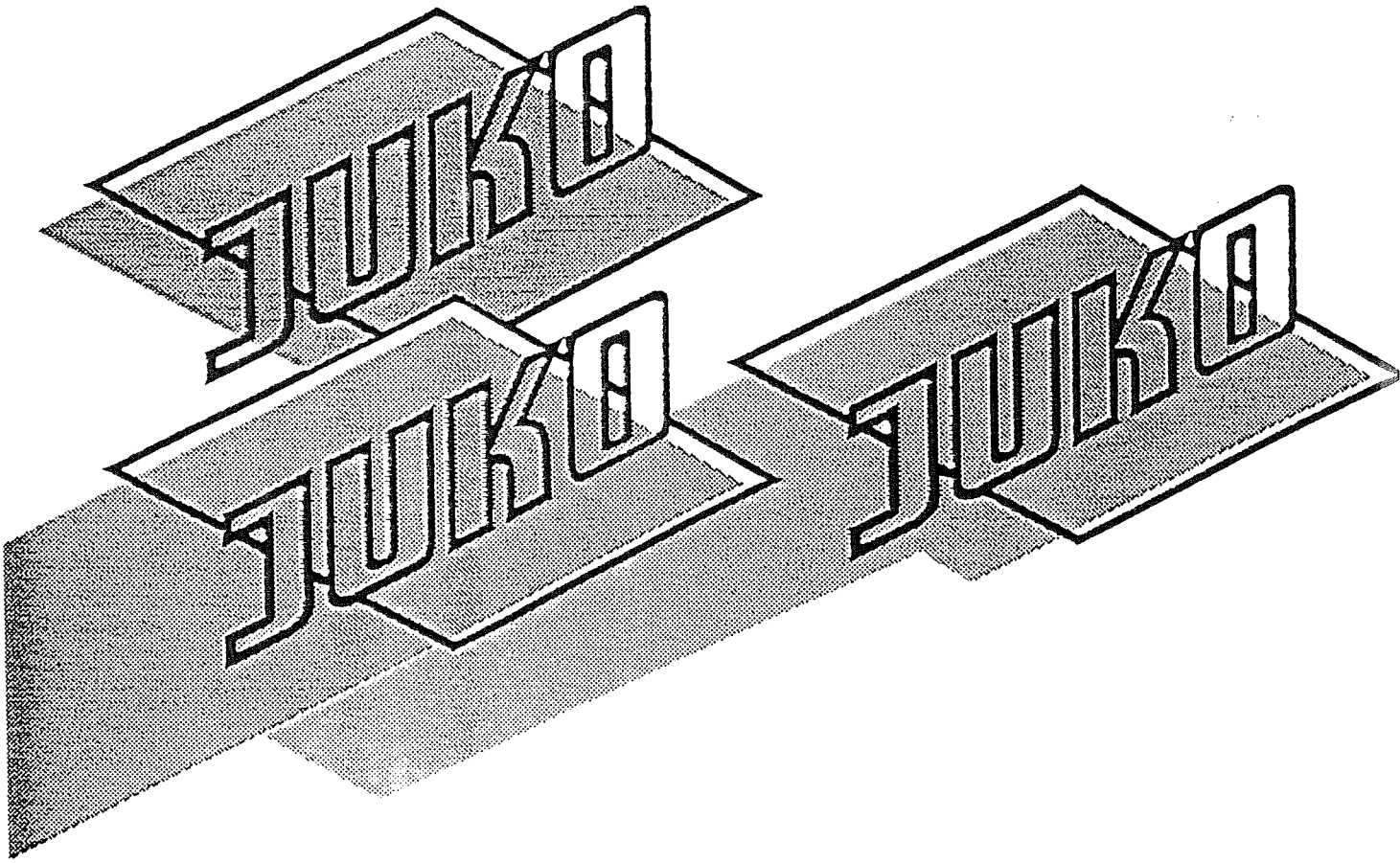

Juko 100 alkaen valmistusnumerosta 9Y-95301., 9V-94301..
gäller från tillverkningsnr.
from serial number

AUTOM.OHJAUSYKSIKKÖ
AUTOMAT STYRNING
AUTOMATIC STEERING UNIT

07.09.96

AUTOMAATTIOHJAUSYKSIKKÖ

Yksikön jalaksien väliä voidaan säätää klertämällä joko toista tai molempia pystysuorassa olevia varsia (1) 180°. Näin on käytettävissä kolme erllaista väliä.

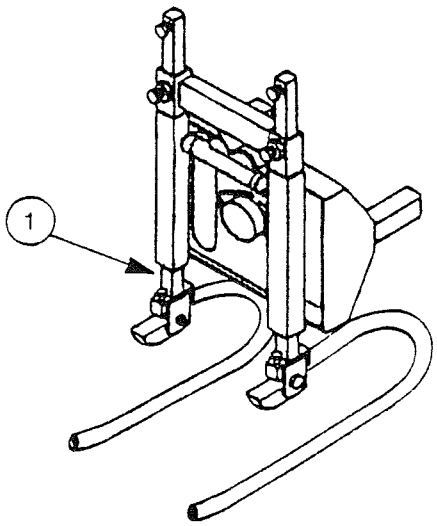

AUTOMATSTYRNING

Avståndet mellan enhetens medar kan justeras genom att vrida antingen den ena eller båda av medarnas vertikala fäströr (1) 180° . På detta sätt har man totalt tre olika avstånd.

AUTOMATIC STEERING UNIT

The space between the runners can be adjusted by changing the position of the vertical arms (1). There is a choice of three (3) positions.
To change the gap, turn either one or both of the vertical tubes 180° degrees.

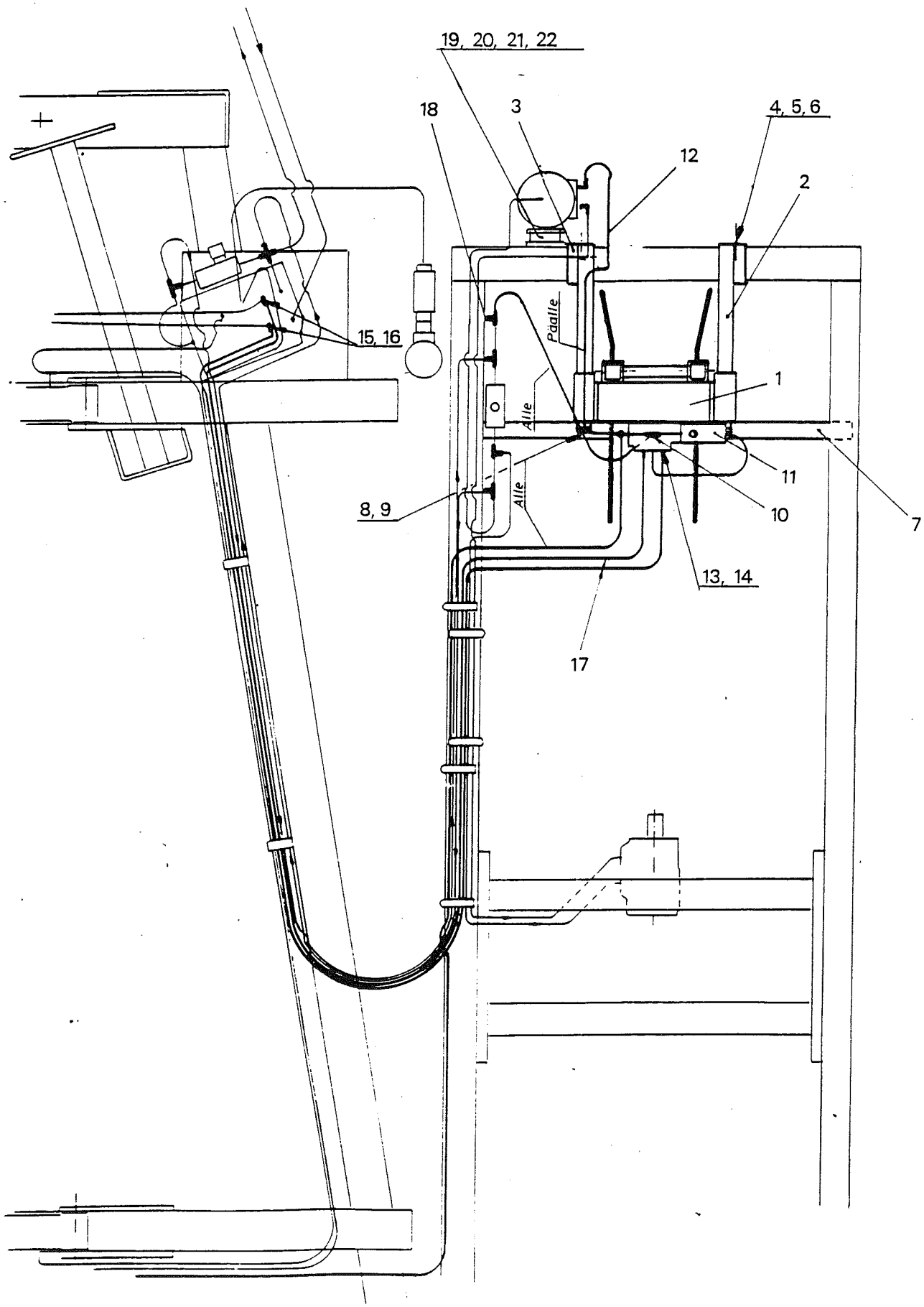
19, 20, 21, 22
18
3
4, 5, 6
12
2
15, 16
Päälle
1
Alle
11
8, 9
Alle
10
7
13, 14
17

Juko 100 alkaen valmistusnumerosta 9Y-95301., 9V-94301..X-9112
gäller från tillverkningsnr. 6711
from serial number

Viite Bild Item	Til.n:o Best.nr Part no	**AUTOMAATTI-OHJAUS-YKSIKKÖ**	**AUTOMAT-STYRNING ENHET**	**AUTOMATIC STEERING UNIT**	Kpl/yksikkö Antal/enhet Qty/unit
1	870578	Automaattioh-jausyksikkö	Automat-styrning	Automatic steering unit	1
2	87579	Kiinnityspalkki, oikea	Fästbalk, höger	Mounting bar, right	1
3	87561	Kiinnityspalkki, vasen	Fästbalk, vänster	Mounting bar, left	1
4	30954	Kuusioruuvi M10x90	Sexkantskruv	Screw, hex	2
5	10607	Aluslaatta M10	Bricka	Washer	2
6	10760	Kuusiomutt. M10	Sexkantmutter	Nut, hex.	2
7	95902	Kiinnityspalkki	Fästbalk	Mounting bar	1
8	30958	Kuusior. M10x25	Sexkantskruv	Screw, hex.	2
9	10607	Aluslaatta M10	Bricka	Washer	2
10	52360	Tiivistelevy Cu 21x28x1.5	Tätning	Seal	2 1
11	950900	Säätöventtiili, koottuna	Reglerventil komplett	Adjusting valve assy	1
12	58641	Paineletku l=1600 1/2"	Tryckslang	Pressure hose	1
13	87834	Tiivistelevy Cu 18x24x1.5	Tätning	Seal	2
14	37807	Sup.kaksoisnippa R 3/8 / R l/4	Förminskning-snippel	Adaptor	2
15	58666	Jatkonippa R 1/4	Förlängnings-nippel	Adaptor, extension	2
16	58665	T-nippa R 1/4 l=2800 (1/4)	T-nippel	Pressure hose	2
18	95903	R-sisäkierretulppa R 1/4	Plugg	Plug	1
19	95904	Jatkopala	Förlängning	Extension pc.	1
20	30957	Kuusior. M10x30	Sexkantskruv	Screw, hex.	4
21	10607	Aluslaatta M10	Bricka	Washer	4
22	10760	Kuusiomutt. M10	Sexkantmutter	Nut, hex.	4
23	57648	Sup.kaksoisnippa R3/8"-R½"	Förminskning-snippel	Adaptor	1

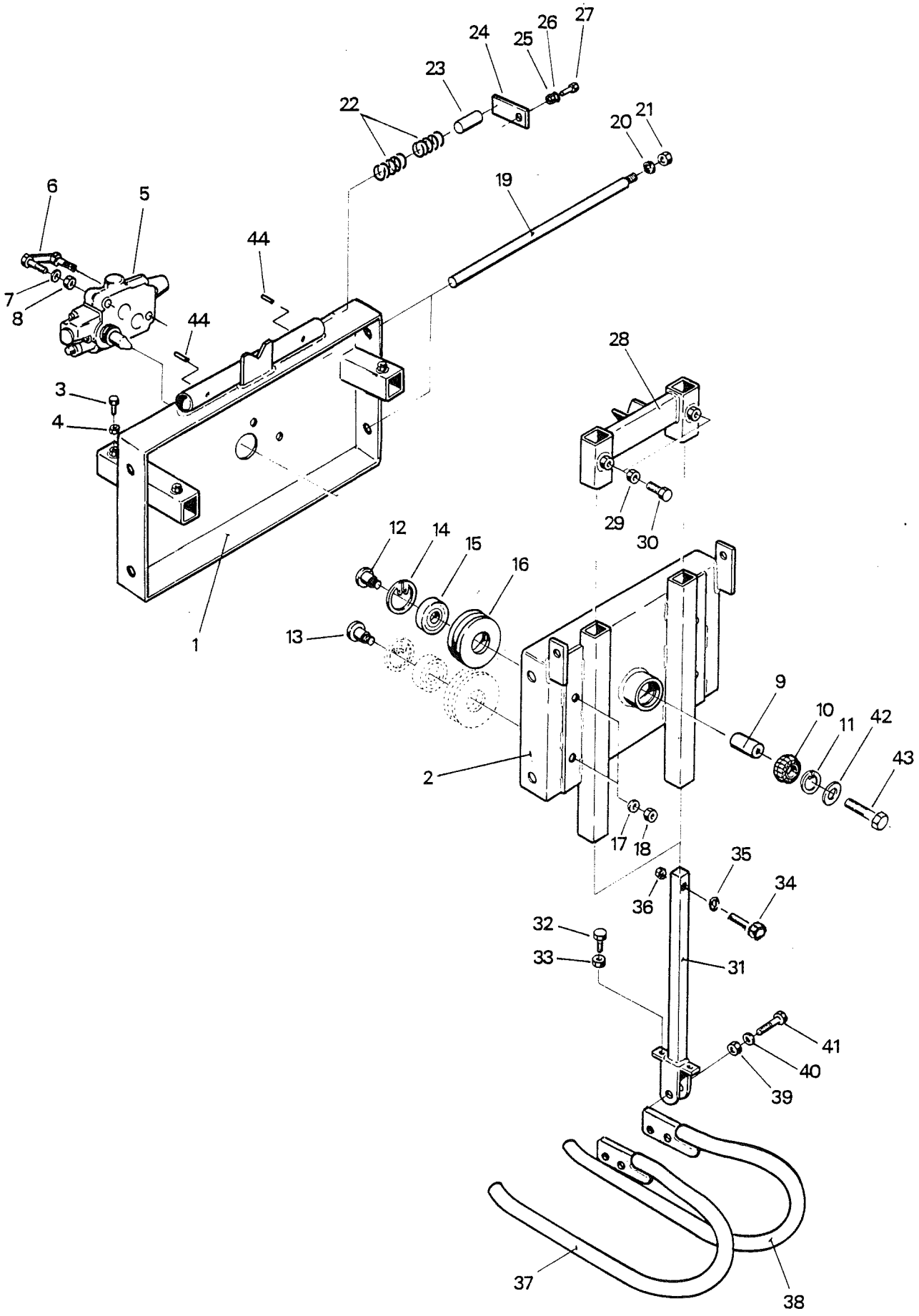
1
2
3
4
5
6
7
8
9
10
11
12
13
14
15
16
17
18
19
20
21
22
23
24
25
26
27
28
29
30
31
32
33
34
35
36
37
38
39
40
41
42
43
44
44

Juko 100	alkaen valmistusnumerosta gäller från tillverkningsnr. from serial number	9Y-95301., 9V-94301..	X-9112 6711

Viite Bild Item	Til.n:o Best.nr Part no	**AUTOMAATTI-OHJAUS-YKSIKKÖ**	**AUTOMAT-STYRNING ENHET**	**AUTOMATIC STEERING UNIT**	Kpl/yksikkö Antal/enhet Qty/unit
	870578	**AUTOMAATTI-YKSIKKÖ**	**AUTOMAT-STYRNING**	**AUTOMATIC STEERING UNIT**	
1	87543	Kotelo, takam.	Kåpa, bakre	Housing, rear	1
2	87577	Kotelo, etum.	Kåpa, främre	Housing, front	1
3	40702	Kuusior. M10x20	Sexkantskruv	Screw, hex.	4
4	10760	Kuusiom. M10	Sexkantmutter	Nut, hex.	4
5	87541	Suuntaventtilli B1.B/BM 30/L	Envägsventil	Directional valve	1
6	87524	Kiinnitysruuvi	Fästskruv	Mounting screw	
7	10350	Jousialusl. M8	Fjäderbricka	Spring washer	2
8	30969	Kuusiom. M8	Sexkantmutter	Nut, hex.	2
9	87546	Akseli	Axel	Axle	1
10	30831	Nivellaakeri GE 25 EJ	Ledlager	Joint bearing	1
11	58392	Pidätinrengas J 42x1.75	Stoppring	Circlip	1
12	87575	Akseli	Axel	Axle	2
13	87574	Akseli	Axel	Axle	2
14	52427	Pidätinrengas J 52x2	Stoppring	Circlip	4
15	55175	Kuulalaakeri 6205 2RS	Kullager	Ball bearing	4
16	87545	Pyörä	Hjul	Roller	4
17	40151	Jousialusl. M16	Fjäderbricka	Spring washer	4
18	30124	Kuusiom. M16	Sexkantmutter	Nut, hex.	4
19	87544	Akseli	Axel	Axle	2
20	40151	Jousialusl. M16	Fjäderbricka	Spring washer	2
21	30124	Kuusiom. M16	Sexkantmutter	Nut, hex.	2
22	87563	Puristusjousi	Fjäder	Pressure spring	4
23	87570	Tappi	Tapp	Pin	2
24	87571	Laatta	Platta	Plate	2
25	30957	Kuusior. M10x30	Sexkantskruv	Screw, hex.	2
26	10607	Aluslaatta M10	Bricka	Washer	2
27	57379	Lukkom. M10	Låsmutter	Nut, hex	2
28	87569	Kiinnitysrunko	Fästram	Mounting frame	
29	30124	Kuusiom. M16	Sexkantmutter	Nut, hex.	2
30	53227	Kuusior. M16x50	Sexkantskruv	Screw, hex.	2
31	87567	Kiinnitysrunko, jalaksen	Fästram, för styrmede	Mounting tube, runner	2
32	57233	Kuusior. M12x60	Sexkantskruv	Screw, hex.	4
33	30968	Kuusiom. M12	Sexkantmutter	Nut, hex.	4
34	57153	Kuusior. M10x50	Sexkantskruv	Screw, hex.	2
35	10607	Aluslaatta M10	Bricka	Washer	2
36	57379	Lukkomutteri M10	Låsmutter	Nut, hex.	2
37	90564	Jalas, oikea	Styrmede,höger	Runner, right	1
38	90565	Jalas, vasen	Styrmede, vänster	Runner, left	1
39	58368	Kuusior. M16x70	Sexkantskruv	Screw, hex.	2
40	30887	Aluslaatta M16	Bricka	Washer	2
41	53190	Lukkomutteri M16	Låsmutter	Nut, hex.	2
42	10350	Jousialusl. M8	Fjädersbricka	Spring washer	1
43	57645	Kuusior. M8x50	Sexkantskruv	Screw, hex.	1
44	53919	Putkisokka 5x28	Rörsprint	Tube pin	2

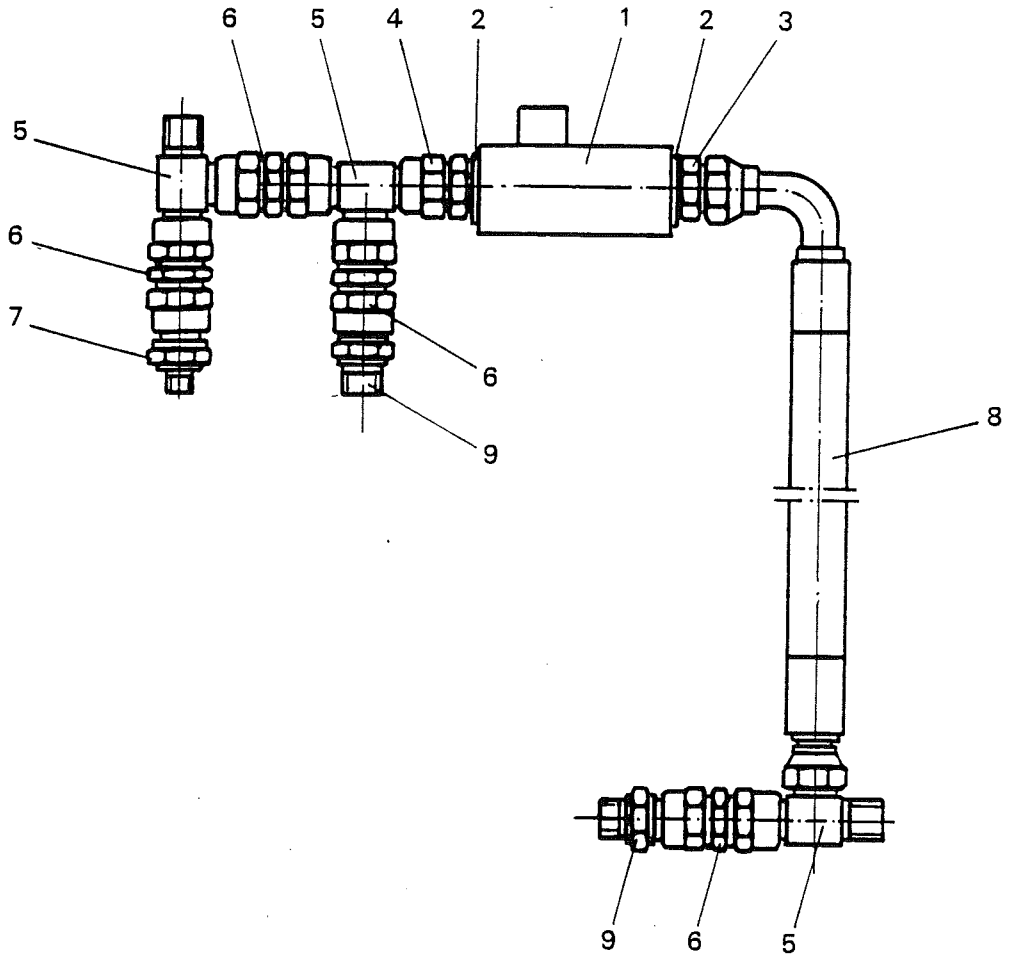
6
5
4
2
1
2
3
5
6
7
6
9
8
9
6
5

Juko 100	alkaen valmistusnumerosta gäller från tillverkningsnr. from serial number	9Y-95301., 9V-94301..	X-9112 6711

Viite Bild Item	Til.n:o Best.nr Part no	**AUTOMAATTI-OHJAUS-YKSIKKÖ**	**AUTOMAT-STYRNING ENHET**	**AUTOMATIC STEERING UNIT**	Kpl/yksikkö Antal/enhet Qty/unit
	950900	**SÄÄTÖVENTT. koottuna**	**REGLERVENT. komplett**	**ADJUSTING VALVE assy**	
1	58899	Vastusvastaventt.	Flädesventil	Counter flow valve	1
2	52360	Tiivistelevy Cu 21x28x1.5	Tätning	Seal	2
3	57648	Kaksoisnippa R 1/2 / R 3/8	Dubbelnippel	Adaptor male/male	1
4	41836	Yhdysnippa R1/2 / 3/8	Kopplings-nippel	Adaptor male/female	1
5	41833	T-nippa R3/8	T-nippel	Adaptor male Tee	3
6	61808	Jatkonippa R 3/8	Förlängnings-nippel	Adaptor extension	4
7	37807	Supistuskaksois-nippa R 3/8/R 1/4	Förminsknings-nippel	Adaptor male/male	1
8	61809	Paineletku l=460 (3/8)	Tryckslang	Pressure hose	1
9	41836	Yhdysnippa R3/8"-R½"	Kopplingsnippel	Adaptor male/female	1

X-6105
6721

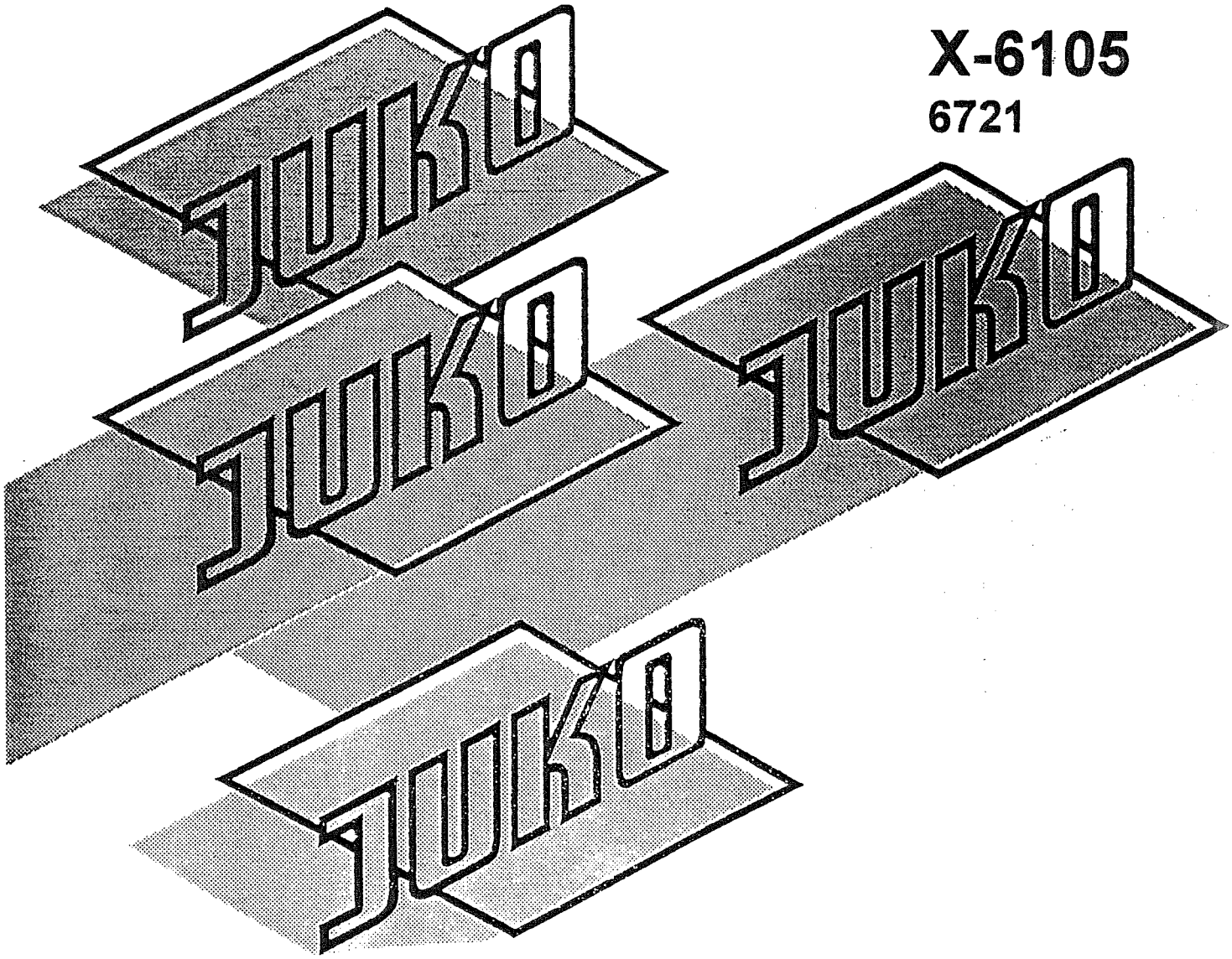

JUKO-10	Alkaen valmistusnumerosta	9V-94301...
JUKO-20	Gäller från tillverkningsnummer	9Y-95301...
JUKO 100	Valid from serial number	S1-43301...
		P-511...

HYDR. RAIDEVÄLIN MUUNNIN
HYDR. SIDOFÖRSKJUTNING
HYDRAULIC TRACK WIDTH ADJUSTING

29.08.96

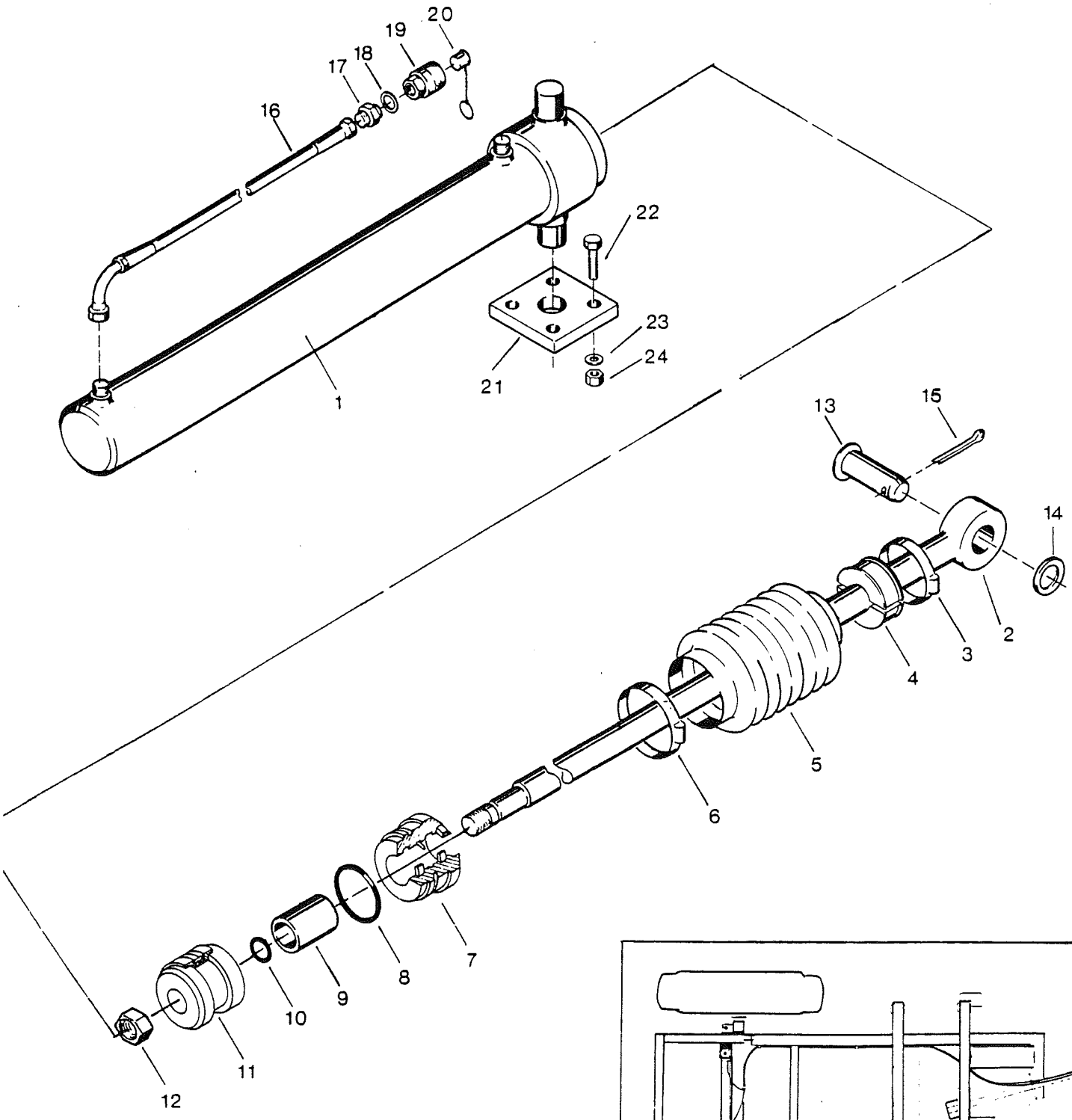
20
19
18
17
16
22
23
24
21
1
13
15
14
2
3
4
5
6
7
8
9
10
11
12

JUKO 100	Alkaen valmistusnumerosta 9V-94301...,9Y-95301		**X-6105**
JUKO 10	Gäller från tillverkningsnr.	S1-43301	
JUKO 20	Valid from serial number	P-511	**6721**

Viite Bild Item	Til.n:o Best.nr Part no	**HYDR.RAIDEVÄLIN MUUNNIN**	**HYDRAULISK SIDOFÖR-SKJUTNING**	**HYDRAUIIC TRACK WIDTH ADJUSTING**	Kpl/yks Ant/enh Pc/unit
	900901	**RAIDEVÄLINMUUNNIN-SYLINTERI, koottuna**	**SIDOFÖRSKJUT. CYL., kompl.**	**ADJUSTING CYLINDER, assy**	
1	90901	Sylinteriputki	Cylinderrör	Cyl. lining	1
2	90902	Männänvarsi	Kolvskaft	Piston rod	1
3	66669	Letkunkiristin 50-65	Slangspännare	Hose clip	1
4	90903	Holkki	Holk	Bush	1
5	32602	Paljekumi	Bälggummi	Rubber guard	1
6	90913	Letkunkiristin 50-85	Slangspännare	Hose clip	1
7	5806l4	Kansi	Lock	Cylinder head	1
8	30886	Lukkorengas	låsring	Locking ring	1
9	90914	Rajoitinholkki	Begräns.holk	Restrictor bush	1
10	31810	O-rengas OR 15,3x2,4	O-ring	O-ring	1
11	310821	Mäntä	Kolv	Piston	1
12	53463	Lukkomutteri M20	Låsmutter M20	Nut, hex. M20 with nylon insert	1
13	90905	Akselitappi	Axeltapp	Pin	1
14	56625	Laatta 25,5x35x2	Bricka	Washer	1
15	57241	Saksisokka 6,3x45	Saxsprint	Cotter pin	1
	900911	**PAINELETKU, koottuna**	**TRYCKSLANG**	**PRESSURE HOSE**	2
16	90911	Paineletku l=6500	Tryckslang	Pressure hose	1
17	90812	Supistusnippa R1/4 - R1/2	Förminsk_ ningsnippel	Adaptor, male/male	1
18	52360	Tiivistelevy	Tätningsbricka Cu 21x28x1,5	Seal	1
19	30844	Pikaliitin C-23072-08	Snabbkoppling	Rapid connector	1
20	58656	Suoja C-26914-08	Skydd	Guard	1
21	90904	Kiinnityslevy	Fästplatta	Bracket	2
22	30522	Kuusioruuvi M12x35	Sexkantskruv	Screw, hex.	8
23	10462	Aluslaatta M12	Bricka	Washer	8
24	56448	Lukkomutteri M12	Låsmutter	Nut, hex. M12 with nylon insert	8

X-3135
6741

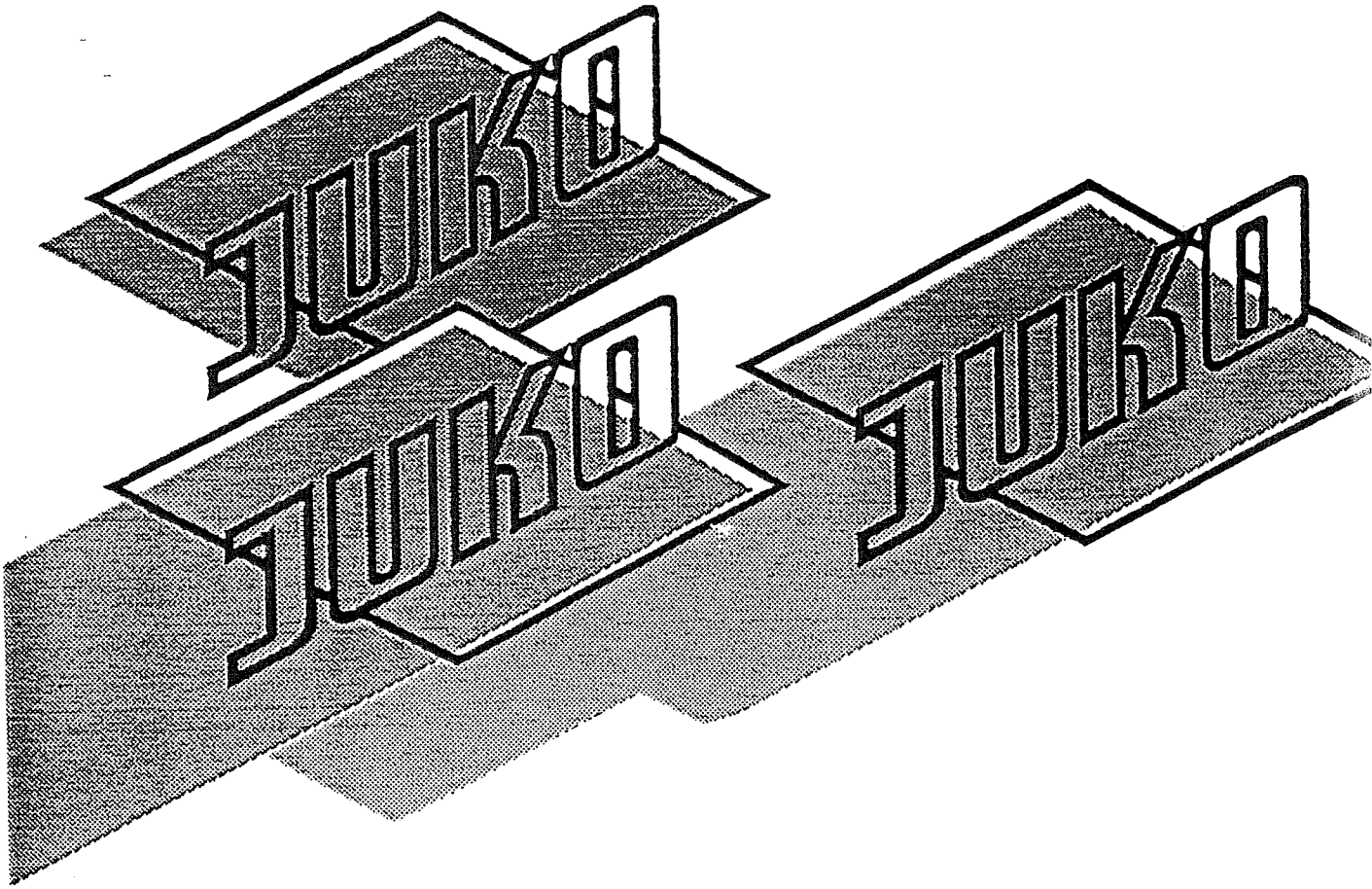

Alkaen valmistusnumerosta	9Y-30001
Gäller från tillverkningsnummer	9V-30001
Suitable for	9X-9751

JUKO 100
JUKO 200

OHJAUSLEVY
STYRSKIVA
STEERING DISC

07.09.96

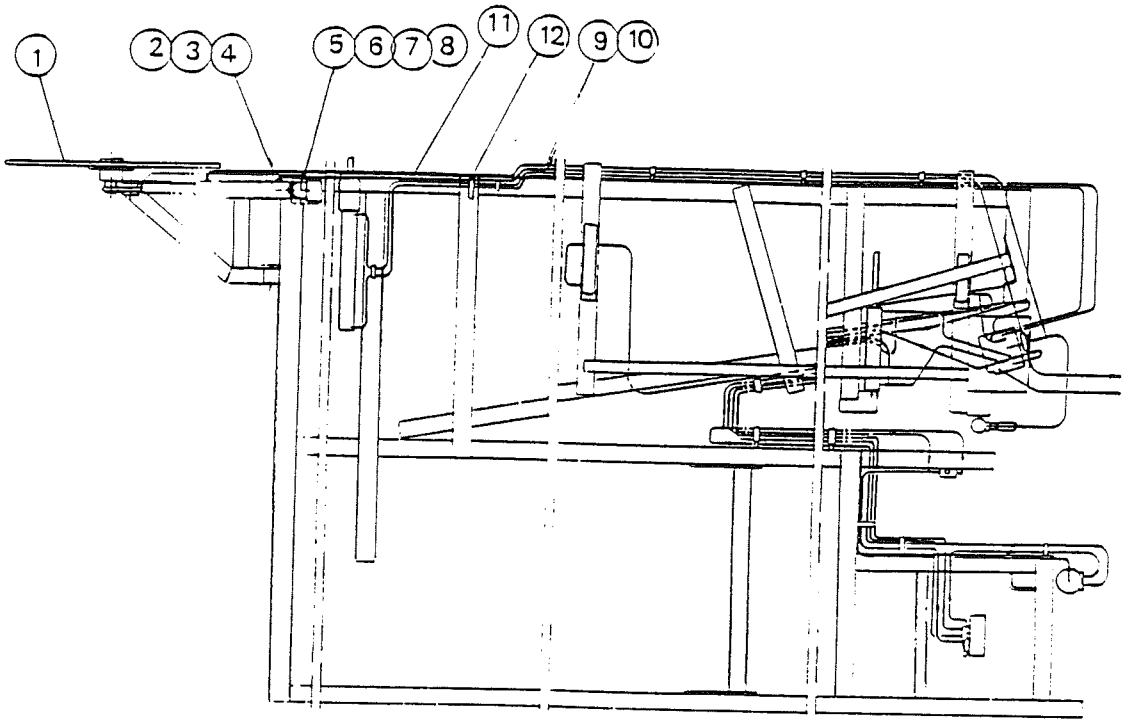

OHJAUSLEVYN ASENNUSOHJE

Ohjauslevy (1) (870805) asennetaan nostorungon takapalkissa oleviin korvakkeisi jakiinnitetäänakselitapilla (2) (53193), laatalla (3) (25110)sekä rengassokalla (4) (40150). Sylinte asennetaan korvakkeeseen ja lukitaan akselitapilla (5) (87252), holkeilla (6) ja (7) (87112 ja 87113) sekä jousisokalla (8) (57228).

Paineletkut (11) (87817) ja (12) (31826) kiinnitetään sylinteriputkeen.

JUKO 100: Paineletkut (263819) l=3200 asennetaan ohjausventtiiliin sekä vannasrungc nostosylinteriin. Letkut kytketään ohjauslevyn sylinterin letkuihim

JUKO 200: Poistetaan hatut koneessa olevista hydrauliputkista ja asennetaan jatkonippa (5 (58650) sekä sup.kaksoisnippa (10) (90812).

Paineletkut kytketään nippoihin. Lopuksi tarkistetaan, että letkut on oikein kytketty siten, ett ohjauslevy ja nostokeula nousevat tai laskevat yhtäaikaa. Jos toinen nousee toisen laskiessa, on ohjauslevyn paineletkut kytkettävä päinvastoin.

MONTERING AV STYRSKIVA

Styrskiva (1) (870805) fästes vid de på lyftramens bakbalk befintliga fästena med axeltapp (2) (53193), bricka (3) (25110) och ringsprint (4) (40150). Hydraulcylindern placeras i sitt fäste och låses med axeltapp (5) (87252), holkar (6) och (7) (87112 och 87113) och fjädersprint (8) (57228).

Tryckslangarna (11) (87817) och (12) (31826) kopplas till cylinderröret.

JUKO 100:
Tryckslangarna (263810) l=3200 monteras på styrventil samt på billarnas lyftcylinder. Slangarna kopplas med slangarna på styrskivans cylinder.

JUKO 200:
Hattarna avlägsnas från de på upptagaren befintliga, för styrskivan avsedda hydraulrören på vilka monteras en förlängningsnippel (9) (58650) samt en förminskningsdubbelnippel (10) (90812).

Härefter kopplas tryckslangarna till nipplarna. Slutligen kontrolleras, att slangarna är riktigt kopplade, d.v.s. så, att styrskivan och lyftstäven höjes eller sänkes samtidigt. Om den ena sänkes då den andra höjes, bör tryckslangarna till styrskivan kopplas tvärtom.

MOUNTING THE STEERING DISC

The steering disc (1) (870805) is mounted on the brackets on the rear bar on he lifting frame of the harvester using the pin (2) (53193), washer (3) (25110) and linch pin (4) (40150). The hydraulic ram is placed in its bracket and locked using pin (5) (87252), bushes (6) and (7) (87112 and 87113) and spring clip (8) (57228).

The hydraulic hoses (11) (87817) and (31826) are connected to the ram.

JUKO 100:
Pressure hoses (263810) l=3200 are to be mounted onto the steering valve and to the lifting ram of the share frame. The hoses are to be connected with the hoses on the ram of the steering disc.

JUKO 200:
The caps are removed from the hydraulic pipes on the harvester, intended for the steering disc, and replaced by extension adaptors (9) (58650) and reducing adaptors (10) (90812).

Then the hydraulic hoses are connected. Finally check, that the hoses are correctly connected, meaning that both steering disc and lifting frame are lifted or lowered at the same time. If one is lifted and the other lowered, the connection of the hoses should be changed.

870 805

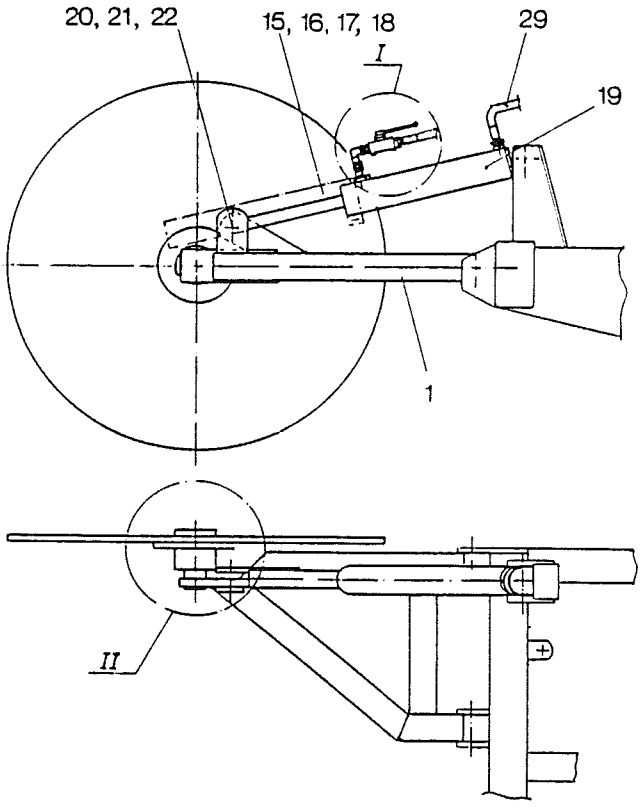
20, 21, 22
15, 16, 17, 18
I
29
19
1
II

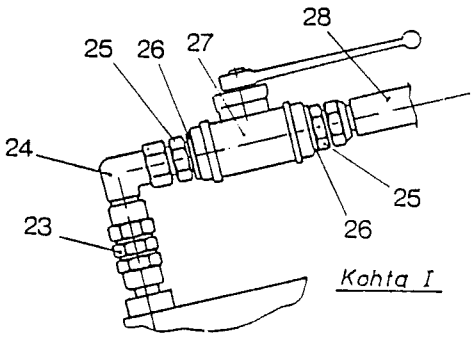
28
25
26
27
24
25
23
26
Kohta I

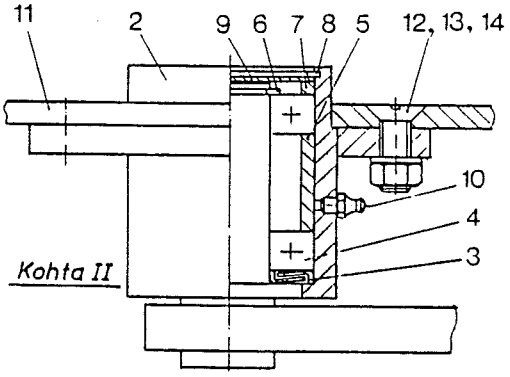
11
2
9
6
7
8
5
12, 13, 14
10
4
3
Kohta II

JUKO 100 — Alkaen valmistusnumerosta 9Y-30001...
Gäller från tillverkningsnummer 9V-30001...
JUKO 200 — Suitable for 9X-9751...

Viite Bild Item	Til.n:o Best.nr Part no	**OHJAUSLEVY** **STYRSKIVA** **STEERING DISC**			Kpl/yksikkö Antal/enhet Qty/unit
	870805	**OHJAUSLEVY, koottuna**	**STYRSKIVA, komplett**	**STEERING DISC, assy**	
1	86132	Runko	Ram	Frame	1
2	86134	Napa	Nav	Hub	1
3	86138	Z-lamelli Z=207	Z-lamell	Z-lamella	1
4	30130	Kuulalaak. 6207	Kullager	Ball bearing	2
5	86135	Holkki	Holk	Bush	1
6	63535	Pid.reng.A35xl,5	Stoppring	Circlip	1
7	86137	Holkki	Holk	Bush	1
8	86140	Pid.reng.J72x2,5	Stoppring	Circlip	1
9	86136	Laippa	Fläns	Flange	1
10	30263	Voitelunippa M6	Smörjnippel	Lubricating nipple	1
11	86126	Ohjauslevy	Styrskiva	Steering plate	1
12	66137	Uppokantar.urar. M12x40	Spåskruv med nedsänkt huvud	Screw with slotted head	4
13	10634	Jousialuslaatta	Fjaderbricka M12	Spring washer	4
14	30968	Kuusiomutt. M12	Sexkantmutte	Nut, hex.	4
15	87175	Suoja	Skydd	Guard	1
16	60339	Kuusior. M8x90	Sexkantskruv	Screw, hex	1
17	10350	Jousialusl. M8	Fjäderbricka	Spring washer	1
18	30969	Kuusiomutt. M8	Sexkantmutter	Nut, hex.	1
19	580660	Hydraulisyl.	Hydraulcyl.	Hydraulic cyl.	1
20	57225	Lukitustappi	Låstapp	Locking pin	1
21	56625	Laatta 25,5x35x2	Bricka	Washer	1
22	10624	Saksisokka 5x40	Saxprint	Split pin	1
23	58666	Jatkonippa	Förlängings R1/4 nippel	Extension nipple	1
24	87818	Kulmanippa R1/4	Vinkkelnippel	Angle nipple	1
25	90820	Kaks.nippa	Dubbelnippel R1/4 / RI/4	Double nipple	2
26	87830	Tiiv.levy	Tätning Cu 3,7x20x6x2,1	Seal plate	2
27	87819	Kuulahana	Kulventil 2T / R 1/4	Ball valve	1
28	53193	Akselitappi	Axeltapp	Knuckle pin	2
29	25110	Laatta 26x36x4	Platta	Washer	2
30	40150	Rengassokka	D9 Ringsprint	Linch pin	2
JUKO 100:					
31	90255	Akselitappi	Axeltapp	Knuckle pin	1
JUKO 200:					
31	87252	Akselitappi	Axeltapp	Knuckle pin	1
32	57228	Jousisokka D4.5	Fjäderprint	Spring pin	1
33	87112	Holkki	Holk	Bush	1
34	87113	Holkki	Holk	Bush	1
JUKO 100:					
x	263810	Painel. l=3200	Tryckslang	Pressure hose	2
JUKO 200:					
35	87817	Paineletku l=2000	Tryckslang	Pressure hose	1
36	31826	Paineletku l=2000	Tryckslang	Pressure hose	1
x	58650	Jatkonippa RI/2	Nippel	Nipple	2
x	90812	Sup.kaks.nippa	Nippel RI/2 / 1/4	Nipple	2

X-6153A
6731

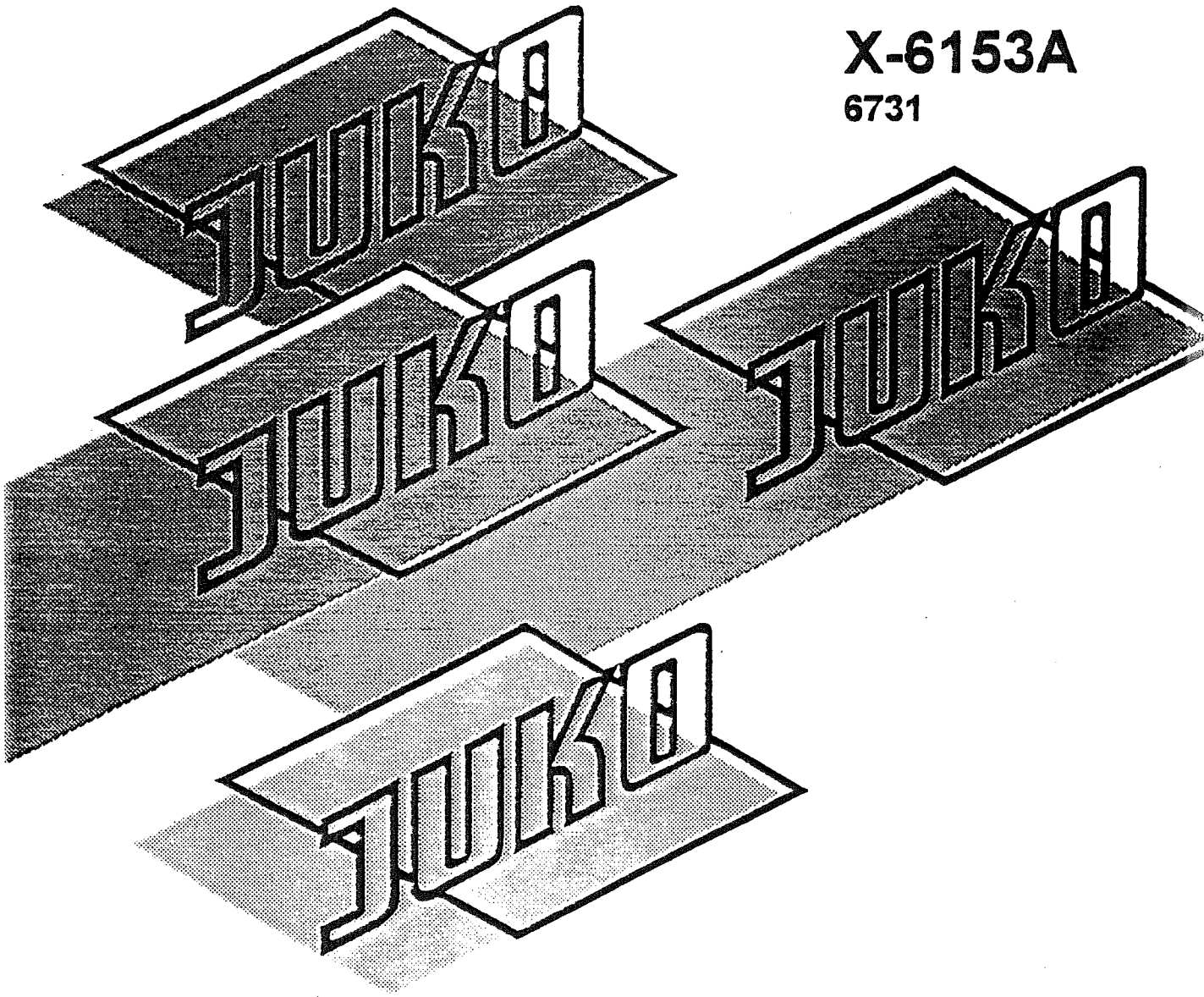

Nosto-Juko	alk. valm.numerosta	2T-20001...
Maximat/Supermat	"	N5-73301...
JUKO-10	"	S1-43301...
JUKO 100	"	9Y-95301...
		9V-94301...

SIVUKIINNITYSSARJA/
esilistimen

050797

ASENNUS

MAXIMAT/SUPERMAT:

Esilistimen sivukiinnityssarja kiinnitetään koneen rungon sivupalkkiin n. 200 mm renkaan keskiöstä taaksepäin.

NOSTO-JUKO:

Esilistimen sivukiinnityssarjan kiinnittämistä varten paketin mukana toimitetaan kiinnityspalkki, joka kiinnitetään koneessa olevalla siirtoelevaattorin kiinnityspultilla.

JUKO 100:

Sivukiinnityssarja kiinnitetään koneen oikeaan reunapalkkiin niin, että esilistin heittää naatin renkaan ja alemman nostoelevaattorin väliin.

1. Esilistimen suojasta leikataan reuna pois kuvan mukaisesti.

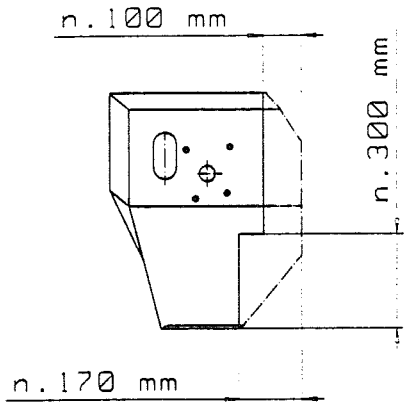

2. Esilistin kiinnitetään sivukiinnityssarjaan U-pulteilla.

3. Säädetään nostosylinterin rajoitinlaatta niin, että esilistin ei törmää runkopalkkiin.

SÄÄDÖT

Laitteessa on monipuoliset säädöt erilaisia nosto-olosuhteita varten. Kiinnityssarjaan kiinnitettävän esilistimen leikkauskorkeutta voidaan säätää portaattomasti pystyputken päässä olevasta säätöruuvista ja teleskooppiputken kiinnityksestä. Listinyksikön työkorkeutta voidaan säätää portaattomasti.
Listimen naatinpoistosuuntaa voidaan säätää portaattomasti kiinnitysakselin mutteria löysäämällä ja kiertämällä runkoa haluttuun suuntaan.

Listintä voidaan keventää portaattomasti kannatinjousen kireyttä muuttamalla. Siirtoajon aikana on listin lukittava kettingillä yläasentoon.

HUOLTO

Listinyksikön akselin laakeri (1 kpl) tulee rasvata päivittäin samoin kuin sivukiinnityssarjan pystyliukupalkki.

LISTINYKSIKÖN JA SIVUKIINNITYSSARJAN ESILISTIMEN NOSTOSYLINTERIN HYDRAULIIKAN KYTKENNÄT:

JUKO 100:

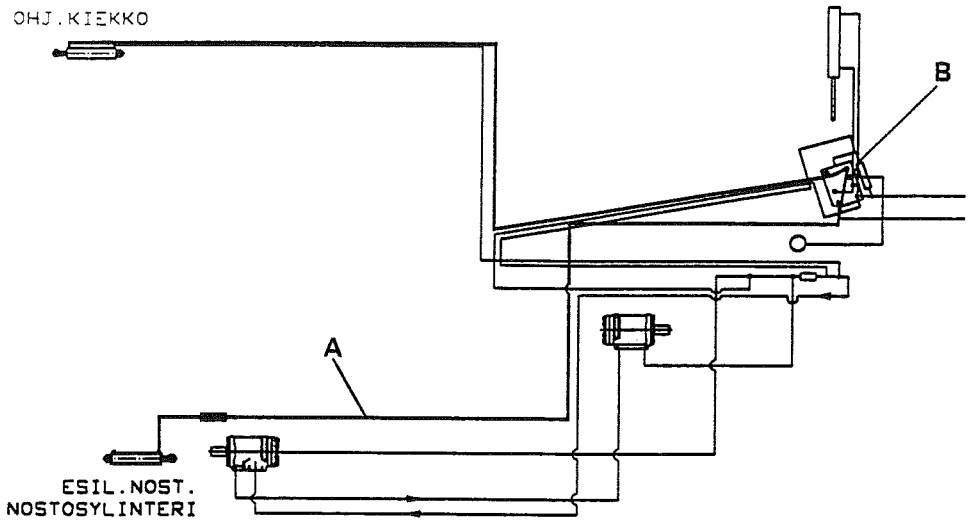

1. Esilistimen nostosylinterin letku (A) kytketään T-liittimen sekä jatkonipan avulla ohjausventtiilin (B) ohjauskiekon nostosylinterille menevään lohkoon.

2. Kaikki paineletkut kiinnitetään runkopalkkiin nippusiteillä:

NOSTO-JUKO:

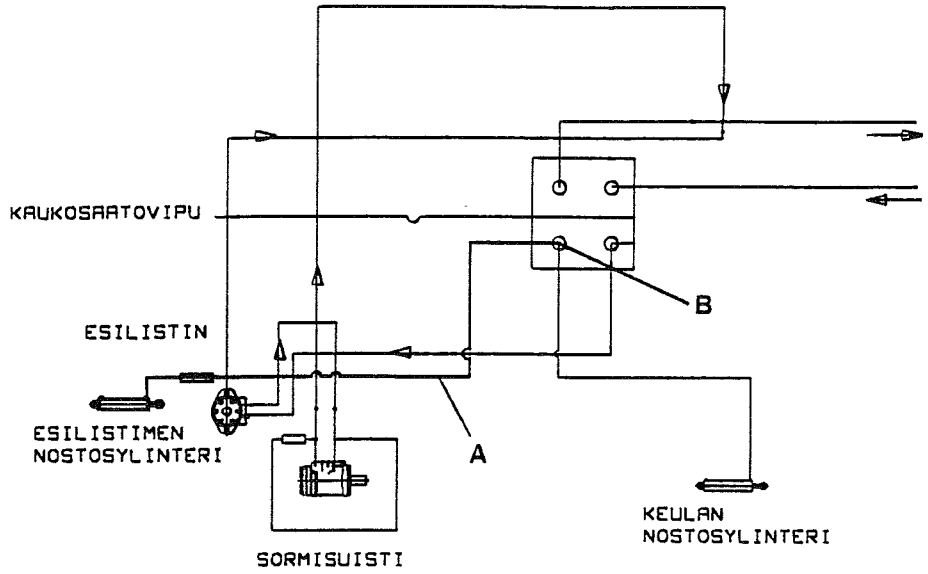

1. Esilistimen nostosylinterin letku (A) kytketään T-liittimen sekä jatkonipan avulla ohjausventtiilin (B) keulannostosylinterille menevään lohkoon.

MAXIMAT/SUPERMAT:

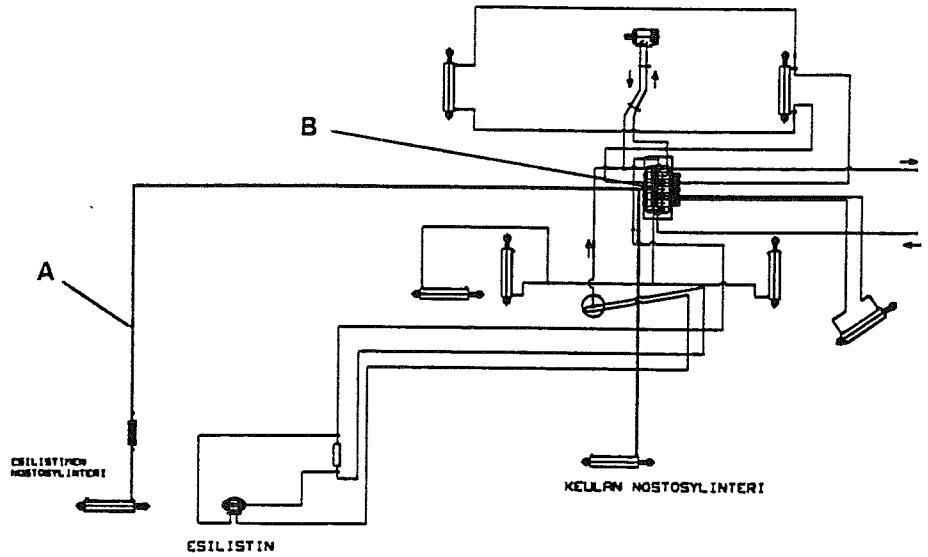

1. Esilistimen nostosylinterin letku (A) kytketään T-liittimen sekä jatkonipan avulla ohjausventtiilin (B
keulannostosylinterille menevään lohkoon.

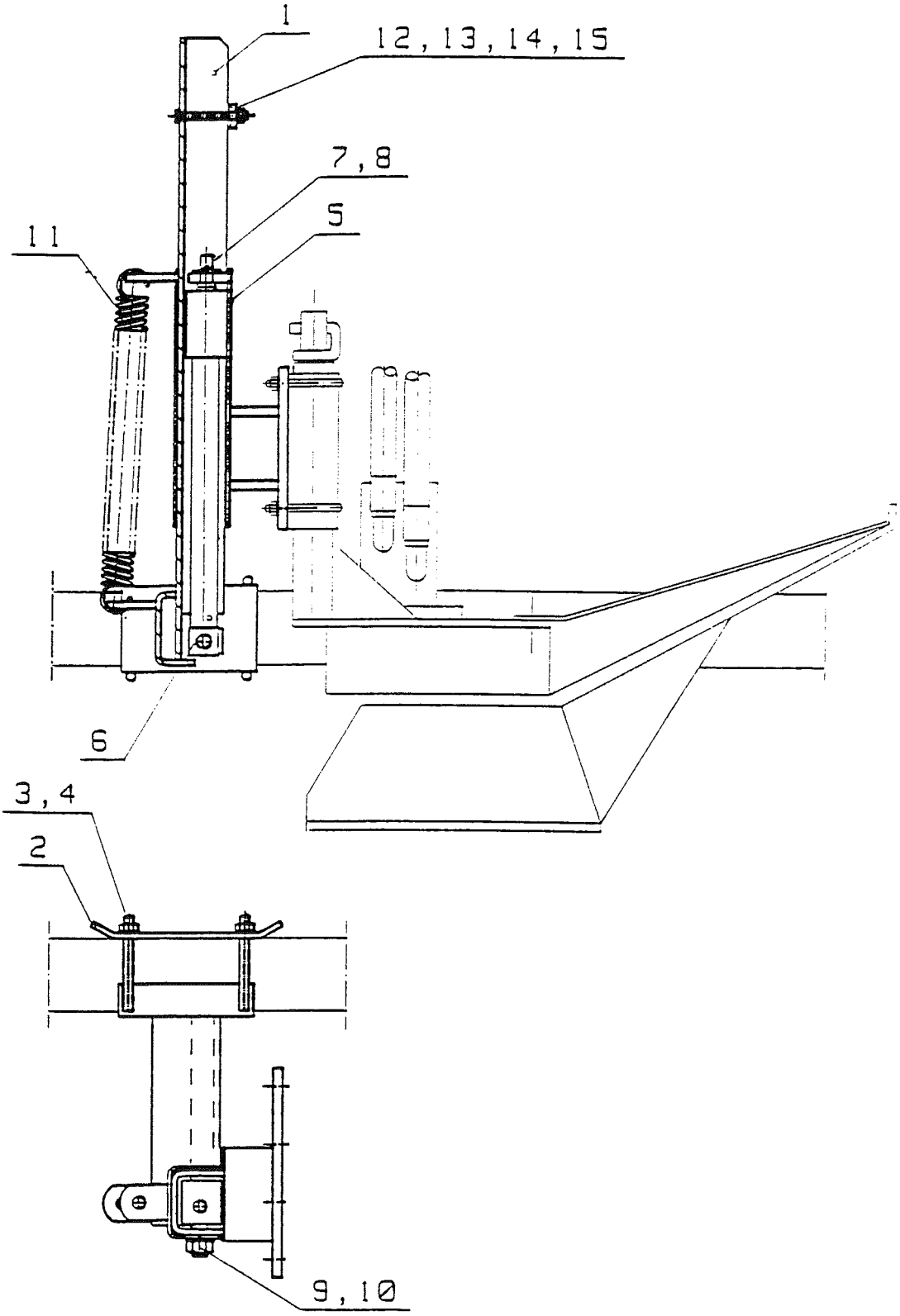
1
12, 13, 14, 15
7, 8
5
11
6
3, 4
2
9, 10

Viite Bild	Til.n:o Best.nr	**SIVUKIINNITYSSARJA** **SIDOMONTERINGSSATS**			Kpl/yksikkö Antal/enhet
1	95963	Runko		Ram	1
2	66545	Levy		Plåt	1
3	10607	Aluslaatta	M10	Bricka	4
4	57379	Lukkomutteri	M10	Lasmutter	4
5	66556	Liukuholkki		Holk	1
6	**420568**	**Sylinteri, koottuna**		**Cylinder, komplett**	
x	42568	Sylinteriputki		Cylinderrör	1
x	42592	Männänvarsi		Kolvstång	1
x	42593	Mänta		Kolv	1
x	42813	Kuusiokoloruuvi	M8x20	Skruv	1
x	42595	Ohjausrengas		Ring	1
x	42594	Kansi		Lock	1
x	42596	Urarengas		Ring	1
x	42597	Ohjausrengas		Ring	1
x	42598	Pyyhkijä		Ring	1
7	30887	Aluslaatta	M16	Bricka	1
8	10931	Saksisokka	5x25	Saxprint	1
9	30887	Aluslaatta	M16	Bricka	1
10	53190	Lukkomutteri	M16	Låsmutter	1
11	66544	Vetojousi		Fjäder	1
12	95964	Laatta		Platta	1
13	53953	Kuusioruuvi	M10x70	Sexkantskruv	1
14	10607	Aluslaatta	M10	Bricka	1
15	57379	Lukkomutteri	M10	Låsmutter	1

X:llä merk.osat eivät ole kuvassa. Med x märkta delar ej avbildade.

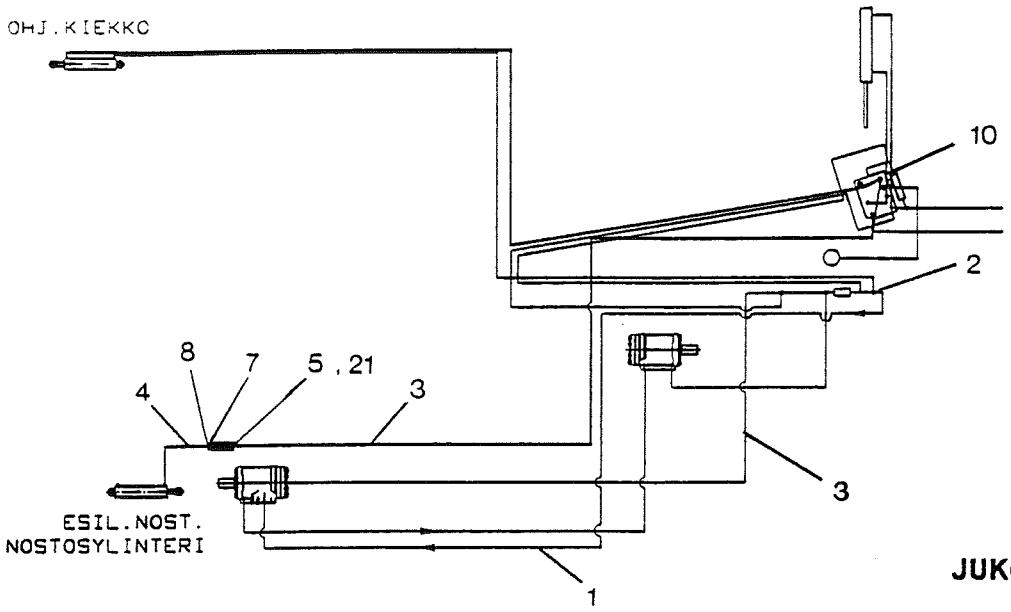

JUKO 100

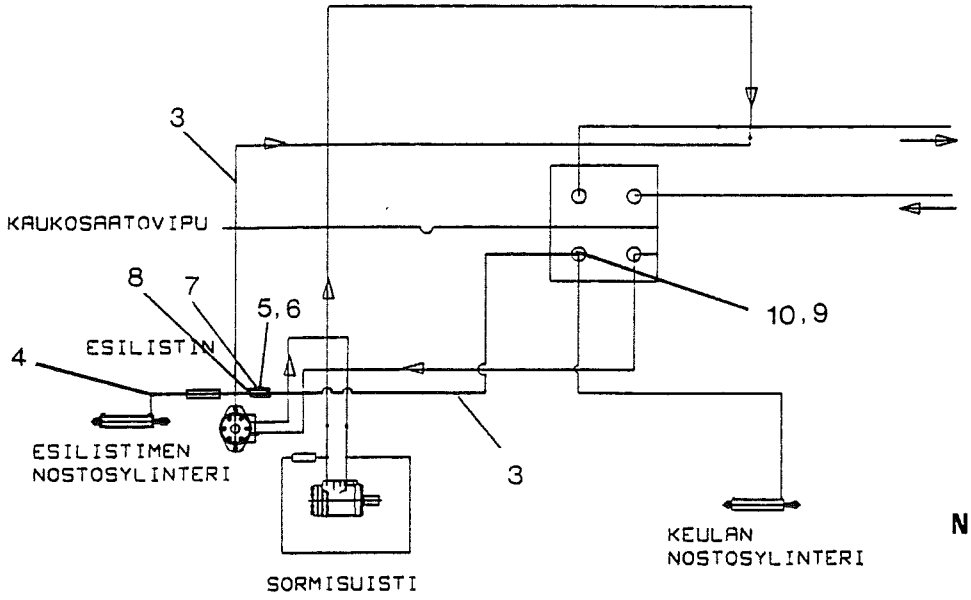

NOSTO-JUKO

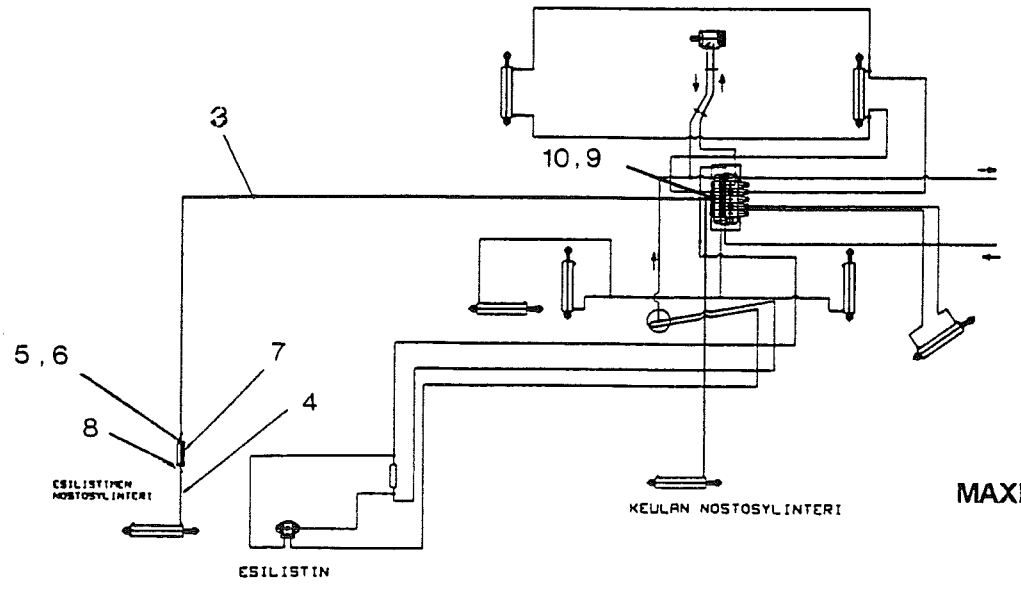

MAXIMAT/SUPERMAT

JUKO-10
JUKO-100

Alk. valmistusnumerosta S1-43301...
9Y-95301...
9V-94301...

Viite Bild	Til.n:o Best.nr	**SIVUKIINNITYSSARJA** **SIDOMONTERINGSSATS**			Kpl/yksikkö Antal/enhet
1	95971	Paineletku	l=4000	Tryckslang	1
2	61815	Kulmanippa		Vinkelnippel	2
3	68388	Paineletku	l=3900	Tryckslang	2
4	66543	Paineletku	l=800	Tryckslang	1
5	90812	Sup.kaks.nippa	R1/2 / R1/4	Dubbel förm.nippel	1
6	52361	Usit-tiiviste		Usit-tätning	2
7	58899	Vastusvastaventtiili		Ventil	1
8	54826	Kaksoisnippa	R1/2 / R1/2	Dubbelnippel	1
9	58666	Jatkonippa	R1/4	Förlangningsnippel	1
10	58665	T-nippa	R1/4	T-nippel	1

Seuraaviin koneisiin, joiden valmistusnumerot sisältyvät sarjoihin; S1-43301 - S1-84205
9Y-95301 - 9Y-40118
9V-94301 - 9V-40532,
tarvitaan lisäksi osat:

57648	Sup.kaksoisnippa	R3/8" / R1/2"	Dubbel förm.nippel	2
95823	Yhdysnippa	R3/8" / R1/2"	Nippel	2

NOSTO-JUKO:

66561	Kiinnityspalkki	Fästbalk	1

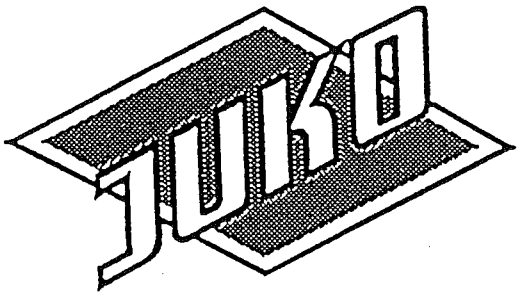

OY JUKO LTD
OPINTIE 4
FIN-23100 MYNÄMÄKI
FINLAND

INT+358+(0)2-4393200
FAX: INT+358+(0)2-4393210